TMC PART NO.	MFRS PART NO.	DETAIL	CENTER SHIELD	GROUND TAB	FOR USE IN BOARD THK.
TS-160-1	111-51-11-084	1	YES	YES	1/16
TS-160-2	111-51-11-059	2	YES	NO	1/16

A

TS-160

REVISIONS

SYM	DESCRIPTION	DATE	E.M.N. NO.	DRAFT	CHKD	APPD
A	TS160-2 & DETAIL COLUMN ADDED; DETAIL-2 ADDED; LABELED EXISTING PIX. DET.-1 W/BAYONET ETC	4/27/64	1129	A.M.	@	JC

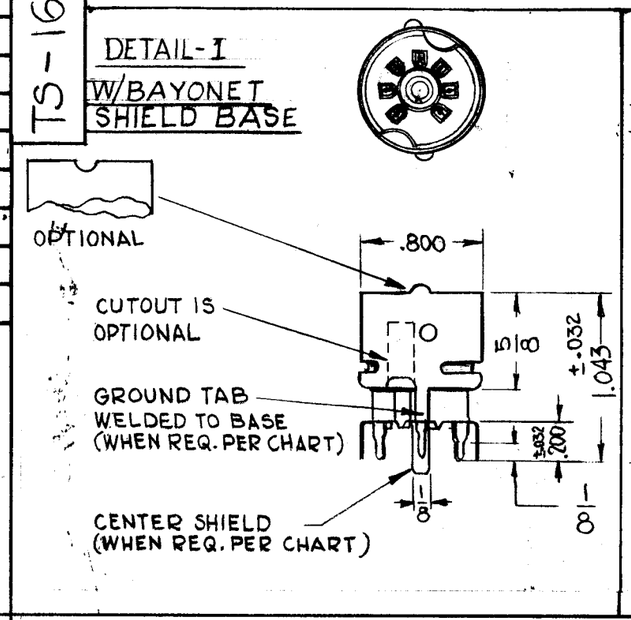

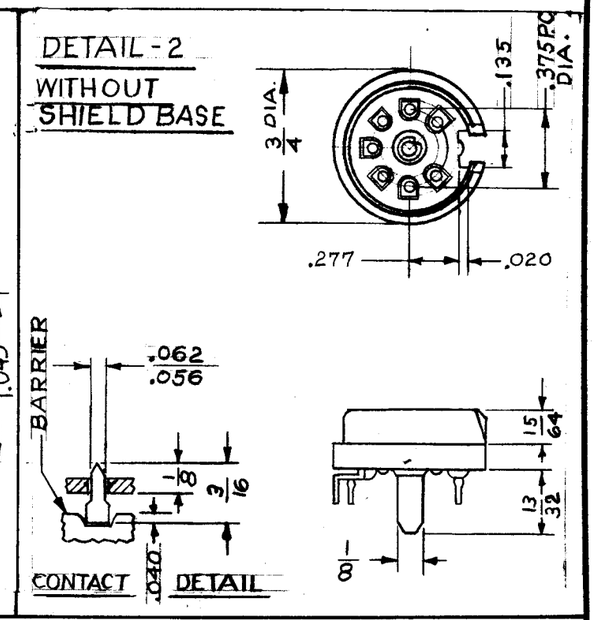

SPECIFICATIONS:

1 - TYPE: STD. MINIATURE 7 PIN STAND-OFF SOCKET.
2 - BODY: LOW-LOSS MICA-FILLED PHENOLIC, TYPE MFE
3 - CONTACTS: PHOSPHOR BRONZE, HOT TINNED
4 - CENTER SHIELD: BRASS, HOT TINNED
5 - GROUND TAB: BRASS, HOT TINNED
6 - BASE: BRASS NICKEL PLATED

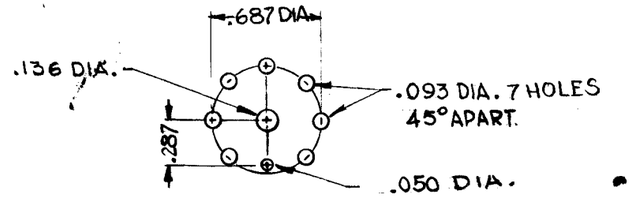

CHASSIS LAYOUT

MFR. REF: CINCH MANUFACTURING CO.

REQ'D.	ITEM	PART NUMBER	DESCRIPTION	SYMBOL
STRUMER				

LIST OF MATERIAL

MATERIAL

FINISH

THE TECHNICAL MATERIEL CORP.
MAMARONECK, NEW YORK

TITLE
SOCKET, ELECTRON TUBE
7 PIN MIN., PRINTED CIRCUIT

DRAWN G. DeLUCIA	DATE 1-4-62	FINAL APPROVAL BP	DATE
CHECKED	DATE 1-8-63	TS-160	A
ELECT. DES.	DATE 1-8-63		
MECH. DES. MP	DATE 1-5-63	SHEET	REV. LTR.

UNLESS OTHERWISE SPECIFIED
DIMENSIONS ARE IN INCHES AND INCLUDE CHEMICALLY APPLIED OR PLATED FINISHES

TOLERANCES
DECIMALS .X ± .05 .XX ± .01 .XXX ± .005
FRACTIONS ± 1/64
ANGLES ± 0° 30'

Q'T'Y./UNIT	MODEL USED ON	ASS'Y. NO.
	STANDARD	

SCALE | CODE

NOTES

THE CONTENTS OF THIS DRAWING ARE THE EXCLUSIVE PROPERTY OF THE TECHNICAL MATERIEL CORP. ITS UNAUTHORIZED USE OR REPRODUCTION IN WHOLE OR IN PART IS STRICTLY FORBIDDEN.

TMC FORM 109