IF IT IS FOUND DESIRABLE TO CHANGE ANY TOLERANCE OR OTHER DETAIL SPECIFIED ON THIS DRAWING NOTIFY THE PURCHASER PROMPTLY.

MAXIMUM ALLOWABLE TOLERANCES HAVE BEEN DETERMINED AND DEVIATIONS WILL BE CAUSE FOR REJECTION. REMOVE ALL BURRS AND SHARP EDGES

TR087

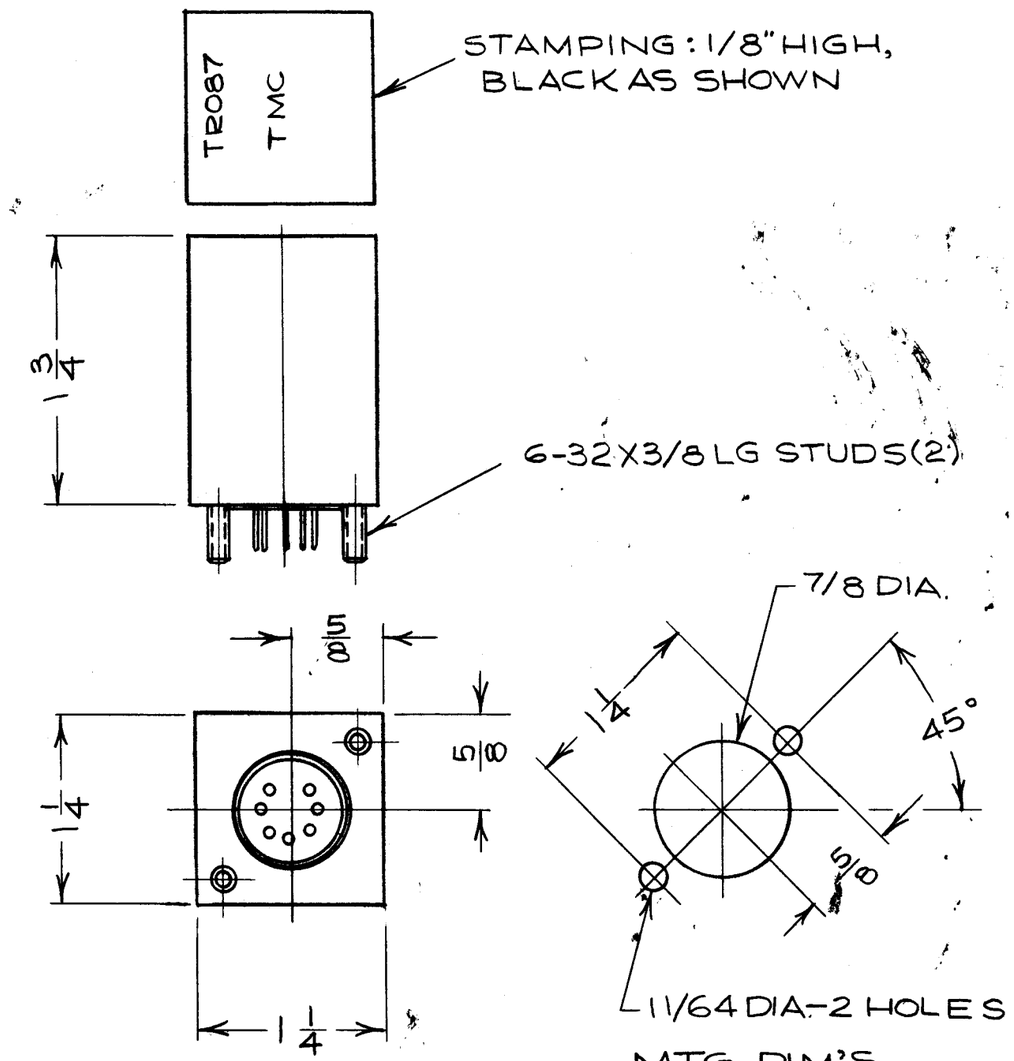

MTG DIM'S

TR087
ELECTRICAL SPECIFICATIONS

FREQ. RANGE: .1 - 2 MC/S.

PRIMARY: TERMINAL(S) 3&5: 1 KΩ BALANCED
——— " ——— 4: CT

SECONDARY: ——— " ——— 1: GND
——— " ——— 7: 70Ω UNBALANCED

MECHANICAL SPECIFICATIONS

LENGTH: 1-1/4"
WIDTH: 1-1/4"
HEIGHT: 1-3/4"
TERMINALS: STD. 7 PIN PLUG-IN TYPE
MOUNTING: (2) 6-32 X 3/8" STUDS
FINISH: TMC GREY (S-115)

NOTICE TO PERSONS RECEIVING THIS DRAWING

THE TECHNICAL MATERIEL CORPORATION claims proprietary right in the material disclosed hereon. This drawing is issued in confidence for engineering information only and may not be reproduced or used to manufacture anything shown hereon without permission from THE TECHNICAL MATERIEL CORPORATION to the user. This drawing is loaned for mutual assistance and is subject to recall at any time.

Property of:
THE TECHNICAL MATERIEL CORPORATION
MAMARONECK, NEW YORK

ISSUE	ITEM	CHANGED FROM	DATE	CN. NO.	DRAFTS	CHECKER	ENG. APP.

TOLERANCES — SCALE: 1:1

ALL OTHERS: DEC. DIM. ± ; FRAC. DIM. ± ; ANGULAR DIM. ±

DRILL, RUNCH, COMMERCIAL STOCK SIZES AND MANUFACTURERS TOLERANCES ARE NOT INCLUDED.

MODEL	PROJECT NO.	ASS'Y. NO.	DATE
DA101	CE5107	A-10186	NOV.17/60.

USED ON

REQ.	ITEM	PART NO.	DESCRIPTION	SYMBOL

STOCK SIZE

MATERIAL — WEIGHT PER PC.

TYPE & TEMPER

HEAT TREAT. SPEC.

FINISH & SPEC. NO.

TMC (Canada) LIMITED
OTTAWA ONTARIO

XFMR-OUTPUT
BROADBAND

DRAWN	ELEC. DES. APP.	MECH. DES. APP.
JPC	M. Kr.	M. Kr.

CHECKED — FINAL APPROVAL

TR087