REVISIONS							
ZONE	LTR	DESCRIPTION	DATE	E.M.N.NO	DRAFT	CHKD	APPD
	X	EXPERIMENTAL RELEASE	7/5/68		C.V.		
	Ø	ORIG. RELEASE FOR PROD.	11-26-68	Ø	R.G		

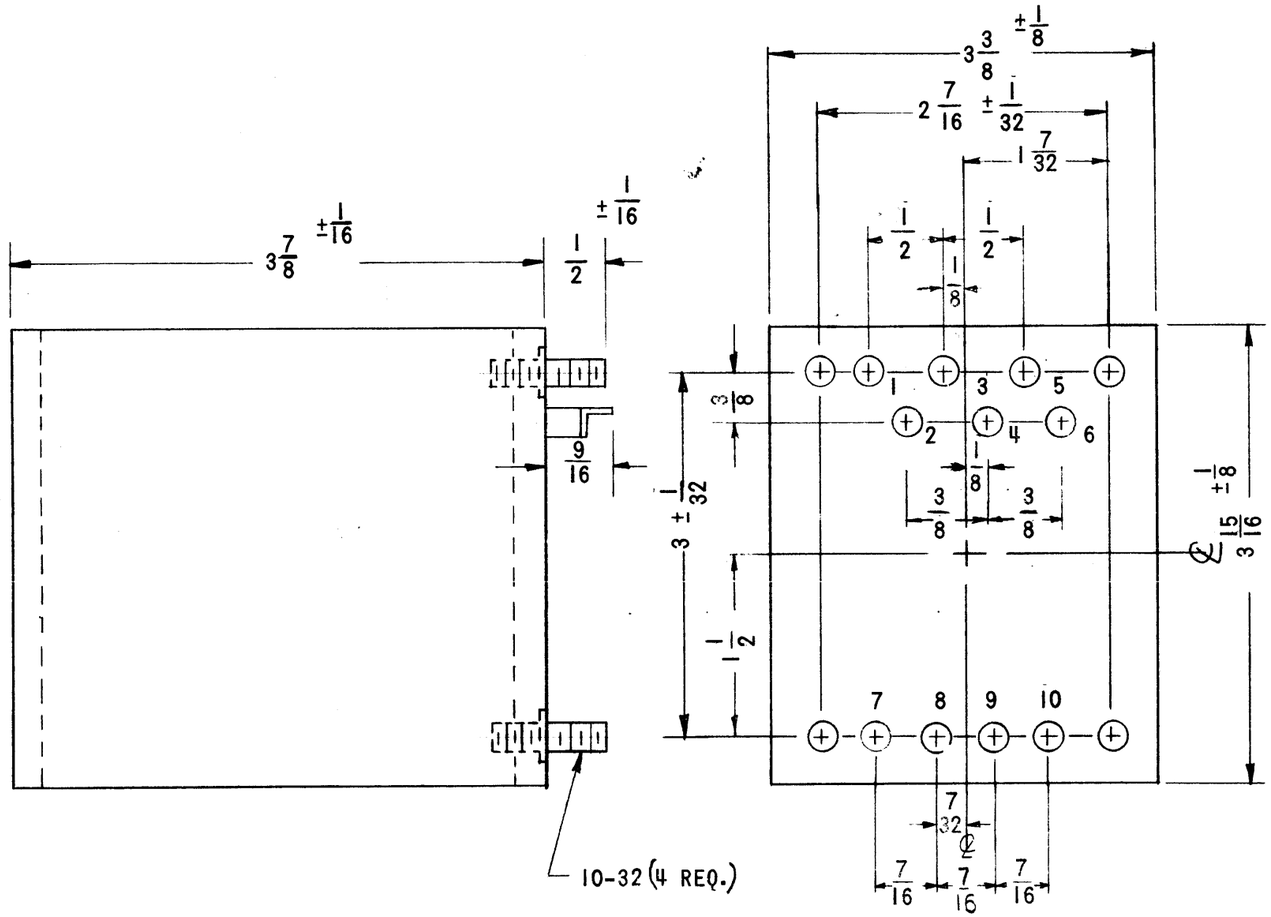

SCHEMATIC

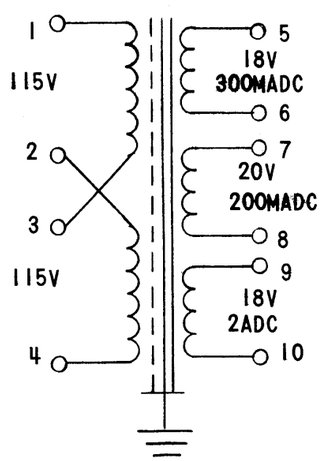

NOTE: TO BE MANUFACTURED IN ACCORDANCE WITH MIL-T-27A, EXCEPT THAT MIL-T-27A SHALL NOT APPEAR ON CASE AND QUALIFICATION TESTING IS NOT REQUIRED

SPECIFICATIONS

PRIMARY WINDING:
- VOLTAGE: 115/230 VAC
- FREQUENCY: 50/60 Hz
- PHASE: 1

SECONDARY WINDING:
- FULL LOAD:
- VOLTAGE: TERM (5-6) 18V. TERM (7-8) 20V, TERM (9-10) 18V
- CURRENT: TERM (5-6) 300mA, TERM (7-8) 200mA, TERM (9-10) 2ADC
- NO LOAD:
- VOLTAGE: TERM (5-6) 19V, TERM (7-8) 21V, TERM (9-10) 19V

ELECTRO-STATIC SHIELDING TO BE PROVIDED

CASE DATA:
- HERMETICALLY SEALED
- CASE TYPE: STEEL
- CASE DIMENSIONS: SHOWN PICTORIALLY

MOUNTING DATA: SHOWN PICTORIALLY

TERMINAL DATA:
- NO. OF TERMINALS: 10
- TYPE: SOLDER TYPE INSULATED

FINISH: SMOOTH GRAY ENAMEL (TMC SOEC S115) EXCEPT TERM ENDS.

MARKING: ALL TERMINALS TO BE METAL STAMPED. MARKING TO BE PER TMC SPECS S566 AND S727.

REQ'D	ITEM	PART NUMBER	DESCRIPTION	SYM.

S. DeMARCO — LIST OF MATERIAL

	RTPH-3	
QTY / UNIT	MODEL USED ON	ASS'Y NO.

APPLICATION

CODE C — 5401-30 (7995)

UNLESS OTHERWISE SPECIFIED DIMENSIONS ARE IN INCHES AND INCLUDE CHEMICALLY APPLIED OR PLATED FINISHES

DECIMALS: .X ± .05, .XX ± .01, .XXX ± .005 — TOLS. — FRACTIONS 1/64, ANGLES 0° ·30'

MATERIAL

FINISH

FINAL APPROVAL	S. DeMarco	DATE 11/26/68
MECH. DES.		DATE 11-26-68
ELECT. DES.		DATE
CHECKED	J. De	DATE 11/22/68
DRAWN	H.G.	DATE 5/21/68

THE TECHNICAL MATERIEL CORP.
MAMARONECK, NEW YORK

TRANSFORMER, POWER, STEP-DOWN

SIZE	CODE IDENT. NO.	DWG NO.	ISSUE
B	82679	TF 376	Ø

SCALE — SHEET OF

NOTICE TO PERSONS RECEIVING THIS DRAWING
THE TECHNICAL MATERIEL CORPORATION claims proprietary right in the material disclosed hereon. This drawing is issued in confidence for engineering information only and may not be reproduced or used to manufacture anything shown hereon without permission from **THE TECHNICAL MATERIEL CORPORATION** to the user. This drawing is loaned for mutual assistance and is subject to recall at any time.

FCI-10-170 (10-66)