TE 141 C

THE CONTENTS OF THIS DRAWING ARE THE EXCLUSIVE PROPERTY OF THE TECHNICAL MATERIEL CORP. ITS UNAUTHORIZED USE OR REPRODUCTION IN WHOLE OR IN PART IS STRICTLY FORBIDDEN.

STANDARD DRAWING

TMC PART NO.	MFR. REF.	MFR. NO.	A BOLT CLEARANCE	B O.D. MAX.	C WIRE SIZE ACCOM.		D MIN	E MAX	F MAX	T	MATERIAL CODE
TE141-1	1,2	33456	6	.391	12-10		.260	.646	.806	.04	A
2	1,2	32994	8	.391	12-10		.260	.646	.806	.04	A
3	1,2	33457	10	.396	12-10		.260	.646	.836	.04	A
4	1,2	33458	1/4	.625	12-10		.360	.746	1.00	.04	A
5	1	33459	5/16	.625	12-10		.458	.746	1.00	.04	A
6	1	33220	3/8	.610	12-10		.521	.816	1.13	.04	A
7	1,2	33468	10	.672	4		.350	.985	1.32	.070/.075	A
8	2	E26	10	.485	6-5		.350	.900	1.13	.065/.068	A
9	2	E71	1/4	.485	6-5		.350	.900	1.13	.065/.068	A
10	2	E72	5/16	.600	6-5		.470	1.03	1.32	.065/.068	A
11	2	E73	3/8	.600	6-5		.470	1.03	1.32	.065/.068	A
12	2	E74	7/16	.820	6-5		.550	1.08	1.49	.065/.068	A
13	2	E75	1/2	.820	6-5		.550	1.08	1.49	.065/.068	A
14	2	E177	5/8	.922	6-5		.484	1.32	1.77	.060/.068	A
15	2	E178	3/4	1.063	6-5		.593	1.39	1.91	.060/.068	A

MATERIAL & FINISH CHART

CODE	MATERIAL	FINISH
A	COPPER	ELECTRO-TINNED

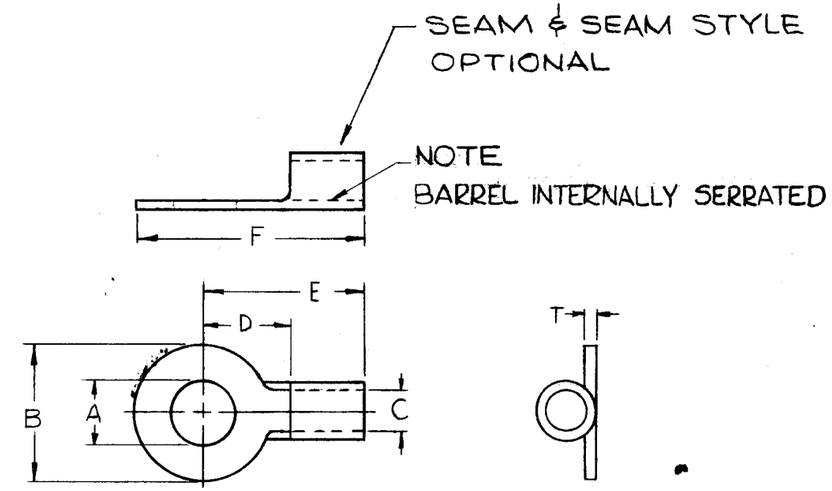

MFRS.
REF. 1 S401-279 (CRIMP TOOL #48116)
REF. 2 S401-35 (CRIMP TOOL #WT117)

SYM	DESCRIPTION	DATE	CH. NO.	DRAFTS	CHECKER	ENG. APP.
C	COMPLETELY REVISED	4.20.67	18132	WW		
B	REDRAWN & REVISED FROM 1 SIZE	12-11-61	6002	RU		

UNLESS OTHERWISE SPECIFIED:
DIMENSIONS ARE IN INCHES
TOLERANCES ON
FRACTIONS ± 1/64 DECIMALS ± .005 ANGLES ± 1/2°

SCALE:

MAXIMUM ALLOWABLE TOLERANCES HAVE BEEN DETERMINED AND ANY DEVIATIONS WILL BE CAUSE FOR REJECTION.
REMOVE ALL BURRS AND SHARP EDGES

REQ. PER UNIT	MODEL	SECTION	ASS'Y. NO.	DATE

USED ON

REQ.	ITEM	PART NO.	DESCRIPTION	SYMBOL

STOCK SIZE: SEE CHART

MATERIAL:

TYPE & TEMPER | HEAT TREAT. SPEC.

SEE CHART

FINISH & SPEC. NO.

THE TECHNICAL MATERIEL CORP.
MAMARONECK, NEW YORK

TERMINAL, LUG
SOLDERLESS

DRAWN: IRUZZO | CHECKED | FINAL APPROVAL

ELEC. DES. APP. | MECH. DES. APP.

TE 141 C

TMC FORM NO. 109

DEFIANCE NO. 1930 36848