STANDARD DRAWING

THE CONTENTS OF THIS DRAWING ARE THE EXCLUSIVE PROPERTY OF THE TECHNICAL MATERIEL CORP. ITS UNAUTHORIZED USE FOR REPRODUCTION IN WHOLE OR IN PART IS STRICTLY FORBIDDEN.

REQ. PER UNIT	USED ON MODEL	ASS'Y. NO.	DATE	SO-239A	B

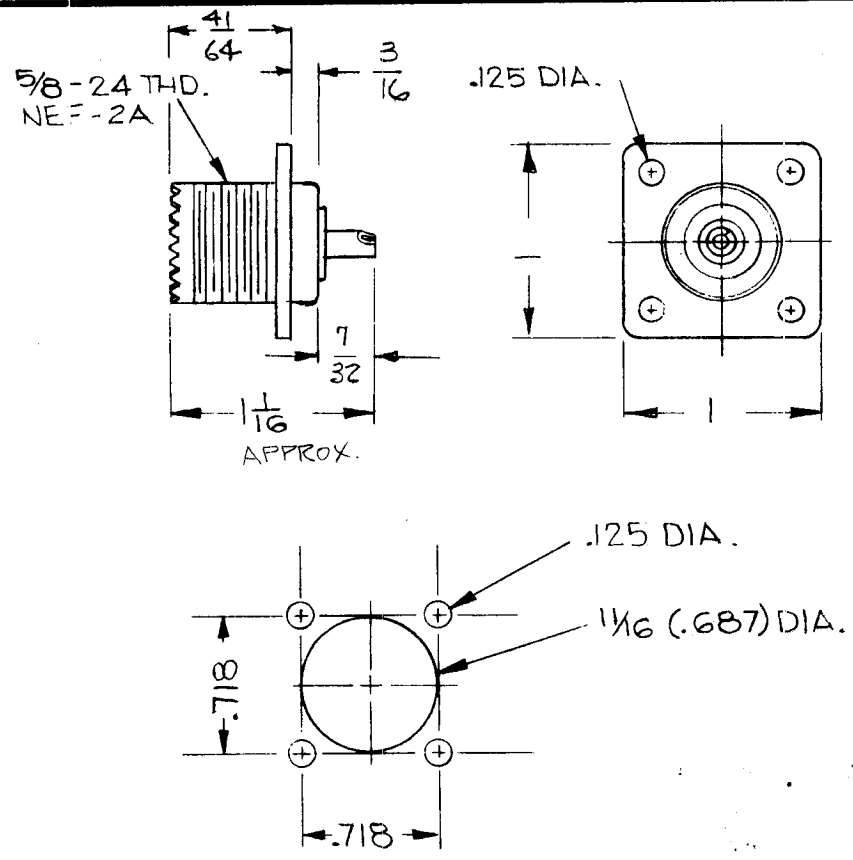

CHASSIS DRILLING PLAN

REF:

NAVY DWG. NO. 49194

SPECIFICATIONS:
Series - UHF
No. of Contacts - 1
Type of Contact - Female
Dielectric - Teflon

ELECTRICAL DATA:
Max. Peak Opr. Volt - 500 Volts
Freq. Limit - 500 MC
Nominal Impedance - Non. C nstant.

CABLE ACCOMMODATIONS:
Type - Solder Cup

Mating Accommodations:
Type - PL-259 (*)

MATERIAL:
Body - Zinc
Contact - Beryllium Copper
Gasket -
Contact Retaining Ring-PH BRZ

FINISH:
External Parts - Silver Plated
- with protective coating
Cont. Retaining Ring-Silver Plated
Contact- Silver Plated (Optional-
Gold Flash on Silv r Plat)

PANEL:
Max. Thickness- non

SYM	DESCRIPTION	DATE	CH. NO.	DRAFTS	CHECKER	ENG. APP.
B	REVISED & REDRAWN	7-10-63	10696	[illegible]	N.P.	[illegible]

UNLESS OTHERWISE SPECIFIED
DIMENSIONS ARE IN INCHES AND INCLUDE CHEMICALLY APPLIED OR PLATED FINISHES

SCALE 1:1

DECIMALS .X ±.05 .XX ±.01 .XXX ±.005 — TOLERANCES — FRACTIONS ± 1/64 ANGLES ± 0° 30'

CODE B

REQ.	ITEM	PART NO.	DESCRIPTION	SYMBOL

STOCK SIZE: SEE NOTES

MATERIAL: TYPE & TEMPER — HEAT TREAT. SPEC.

SEE NOTES

FINISH & SPEC. NO.

THE TECHNICAL MATERIEL CORP.
MAMARONECK, NEW YORK

CONNECTOR, RECEPTACLE
SERIES UHF

DRAWN	CHECKED	FINAL APPROVAL
R. Chmarth 7-10-63	N.P.	[illegible]

ELEC. DES. APP. — MECH. DES. APP. 8/30/63

SO-239A B

TMC FORM NO. 108-A

STANDARD DRAWING

OGILVIE PRESS, INC., BROOKLYN 17, N. Y. REPROVEL NO. 400H 3787