REQ. PER UNIT	USED ON MODEL	ASS'Y. NO.	DATE	RL 137
1	GPT 40K		1-15-60	

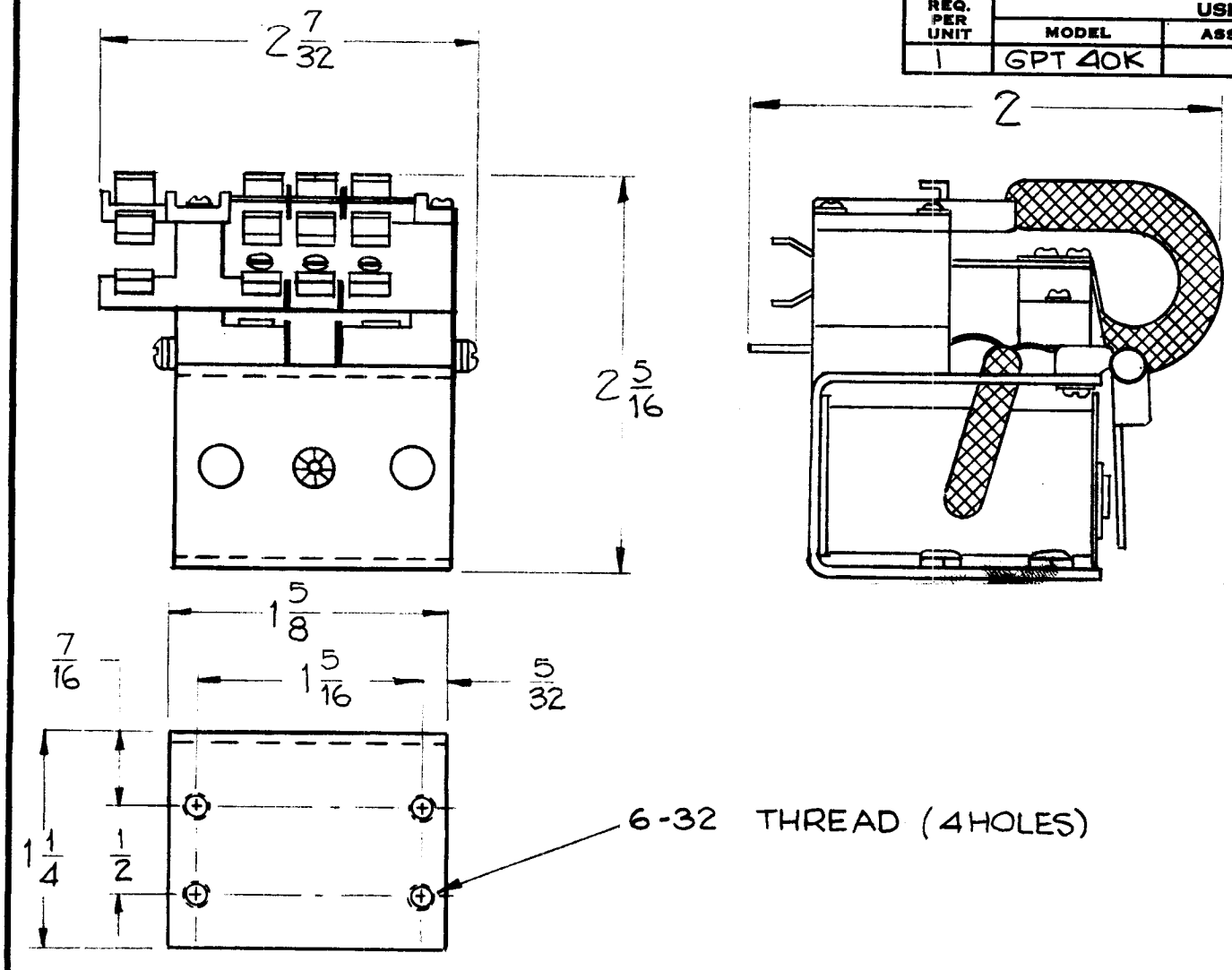

SPECIFICATIONS

COIL ~ .93 OHMS ±10%
MOISTURE RESISTANT
VARNISHED.

PILE UP ~ 4 FORM C
(4 PDT)

CONTACTS ~ CODE 15
1/4" SILVER CADIUM
RATED 25 AMPERES

ADJUSTMENT ~ OPERATE
1 AMP DC

ISSUE	ITEM	CHANGED FROM	DATE	CH. NO.	DRAFTS	CHECKER	ENG. APP.

TOLERANCES

DEC. DIM. ±
FRAC. DIM. ±
ANGULAR DIM. ±

SCALE: S-401-59 (33BAC90-E1)

MAXIMUM ALLOWABLE TOLERANCES HAVE BEEN DETERMINED AND ANY DEVIATIONS WILL BE CAUSE FOR REJECTION.
REMOVE ALL BURRS AND SHARP EDGES

REQ.	ITEM	PART NO.	DESCRIPTION	SYMBOL

STOCK SIZE

MATERIAL

TYPE & TEMPER | HEAT TREAT. SPEC.

FINISH & SPEC. NO.

THE TECHNICAL MATERIEL CORP.
MAMARONECK, NEW YORK

RELAY, ARMATURE

DRAWN | CHECKED | FINAL APPROVAL

ELEC. DES. APP. | MECH. DES. APP.

RL 137

FORM 106-A