APPLICATION			REVISIONS						
QTY	MODEL USED ON	ASS'Y NO.	LTR	DESCRIPTION	DATE	E.M.N.NO	DRAFT	CHKD	APPD
2	PAL-15TNT	A5873	Ø	ORIG. RELEASE FOR PRODUC.	3-19-91		G.D.L		

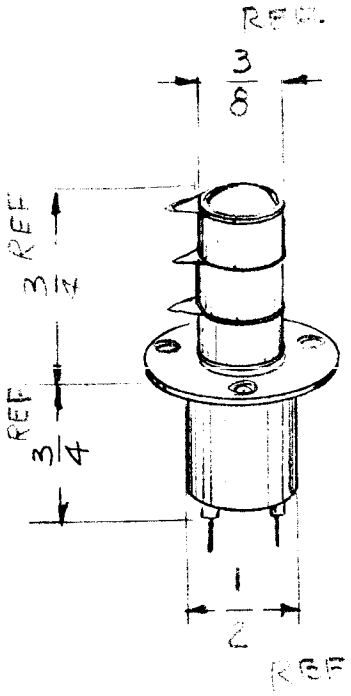

ELEC. SPECIFICATION

26.5 V.D.C.
920 Ω ± 10%
SPDT TYPE

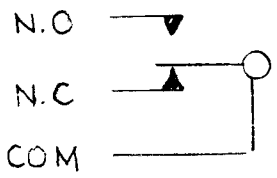

SCHEMATIC

ITT JENNINGS CORP.

REF: RFID 265 TYPE SPDT

UNLESS OTHERWISE SPECIFIED DIMENSIONS ARE IN INCHES AND INCLUDE CHEMICALLY APPLIED OR PLATED FINISHES	REQ'D	ITEM	PART NUMBER	DESCRIPTION	SYM.
	LIST OF MATERIAL				

DECIMALS		FRACTIONS
.X ± .05	TOLS.	1/64
.XX ± .01		ANGLES
.XXX ± .005		0° 30'

FINAL APPROVAL	DATE 1/4/91	THE TECHNICAL MATERIEL CORP. MAMARONECK, NEW YORK
MECH. DES.	DATE	
ELECT. DES.	DATE	VACUUM RELAY
CHECKED	DATE	
DRAWN G.D.L	DATE 1-4-91	

MATERIAL —

FINISH —

NOTICE TO PERSONS RECEIVING THIS DRAWING
THE TECHNICAL MATERIEL CORPORATION claims proprietary right in the material disclosed hereon. This drawing is issued in confidence for engineering information only and may not be reproduced or used to manufacture anything shown hereon without permission from **THE TECHNICAL MATERIEL CORPORATION** to the user. This drawing is loaned for mutual assistance and is subject to recall at any time.

SIZE	CODE IDENT. NO.	DWG NO.	ISSUE
A	82679	RL 108	Ø
SCALE ~		SHEET OF	

FCI-10-170