REQ. PER UNIT	USED ON MODEL	ASS'Y. NO.	DATE	PX-326
1	RTF		2-3-56	

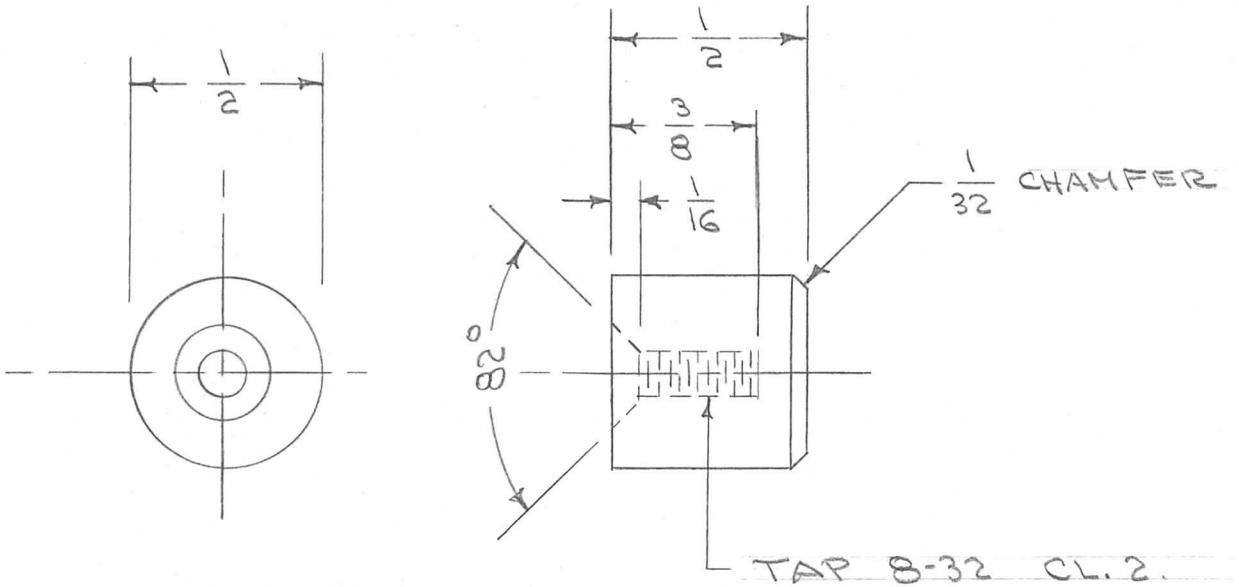

ISSUE	ITEM	CHANGED FROM	DATE	CH. NO.	DRAFTS	CHECKER	ENG. APP.

TOLERANCES

DEC. DIM. ±
FRAC. DIM. ± 1/64
ANGULAR DIM. ±

SCALE:

MAXIMUM ALLOWABLE TOLERANCES HAVE BEEN DETERMINED AND ANY DEVIATIONS WILL BE CAUSE FOR REJECTION.
REMOVE ALL BURRS AND SHARP EDGES

REQ.	ITEM	PART NO.	DESCRIPTION	SYMBOL
1/2 D. ROD			THE TECHNICAL MATERIEL CORP. MAMARONECK, NEW YORK	
STOCK SIZE				
BAKELITE			KNOB, CAP. INC. SWITCH. POW/AMP	
MATERIAL				

TYPE & TEMPER	HEAT TREAT. SPEC.	DRAWN	CHECKED	FINAL APPROVAL
		CDD 2/3/56	[signature]	[signature]
BLACK			[signature] 2/6/58	PX-326
FINISH & SPEC. NO.		ELEC. DES. APP.	MECH. DES. APP.	