REQ. PER UNIT	USED ON			
	MODEL	ASS'Y. NO.	DATE	
1	TLI-1	A-1438	7-15-57	PO-143

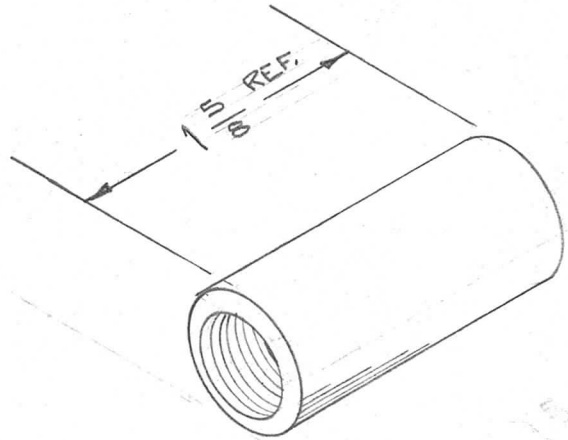

MATERIAL:

STEEL, WHITE, HOT DIPPED GALVANIZED

FINISH:

S-114 ZINC CHROMATE PRIMER
S-115 TMC GRAY
(OUTSIDE SURFACES)

GENERAL ELECTRIC SUPPLY CORP.

ISSUE	ITEM	CHANGED FROM	DATE	CH. NO.	DRAFTS	CHECKER	ENG. APP.

TOLERANCES

DEC. DIM. ±
FRAC. DIM. ±
ANGULAR DIM. ±

SCALE:

MAXIMUM ALLOWABLE TOLERANCES HAVE BEEN DETERMINED AND ANY DEVIATIONS WILL BE CAUSE FOR REJECTION.
REMOVE ALL BURRS AND SHARP EDGES

REQ.	ITEM	PART NO.	DESCRIPTION	SYMBOL

STOCK SIZE: SEE NOTE

MATERIAL:

TYPE & TEMPER: SEE NOTE

HEAT TREAT. SPEC.:

FINISH & SPEC. NO.:

THE TECHNICAL MATERIEL CORP.
MAMARONECK, NEW YORK

3/4" PIPE COUPLING

DRAWN	CHECKED	FINAL APPROVAL
SC 7-15-57		

ELEC. DES. APP.:
MECH. DES. APP.:

PO-143