REVISIONS						
SYM	DESCRIPTION	DATE	E.M.N. NO.	DRAFT	CHKD	APPD
X	EXP. RELEASE	3/18/65		JL		
Ø	ORIGINAL RELEASE FOR PRODUCTION	3/18/65		JL	[illegible]	

PM1231 Ø

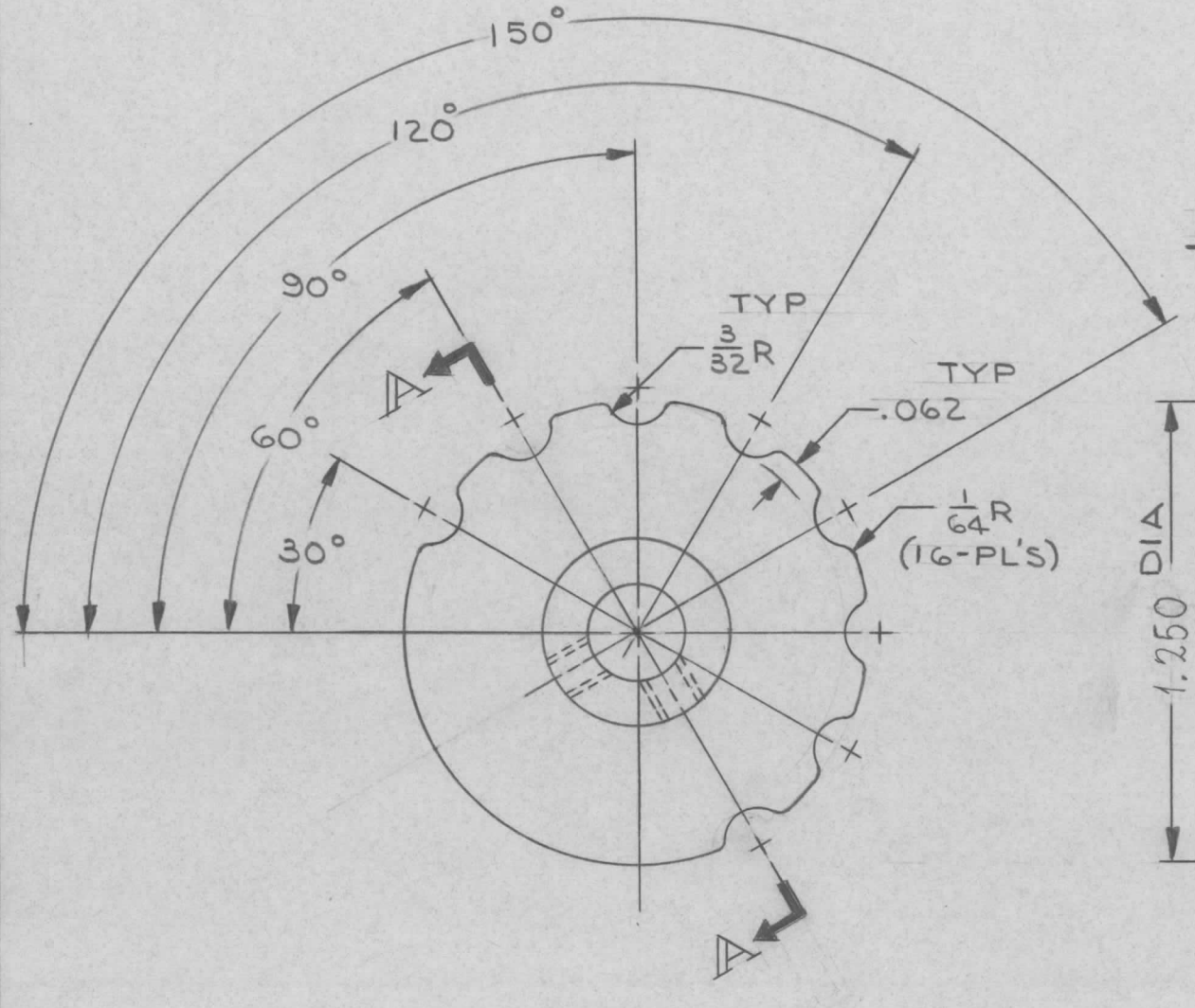

SECTION A-A

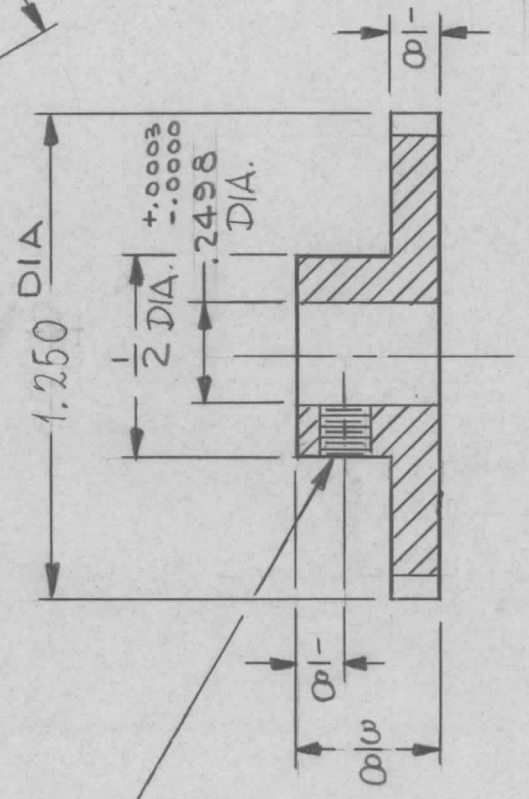

No. 36 (.1065) DRILL &
TAP No. 6-32 NC-2B TH'D
(2-PLACES)

REQ'D.	ITEM	PART NUMBER	DESCRIPTION	SYMBOL
POSE			LIST OF MATERIAL	

MATERIAL: ALUMINUM 2024-T4

FINISH: YELLOW IRIDITE PER TMC SPEC S404

THE TECHNICAL MATERIEL CORP.
MAMARONECK, NEW YORK

TITLE: CAM, SWITCH, 8 POSITION

Q'T'Y./UNIT	MODEL USED ON	ASS'Y. NO.
1	SME-1	

SCALE: 2/1 CODE:

UNLESS OTHERWISE SPECIFIED
DIMENSIONS ARE IN INCHES AND INCLUDE CHEMICALLY APPLIED OR PLATED FINISHES

DECIMALS	TOLERANCES	FRACTIONS
.X ± .05		± 1/64
.XX ± .01		ANGLES
.XXX ± .005		± 0° 30′

DRAWN: J. LESHINSKI	DATE: 3/18/65	FINAL APPROVAL: [signature]	DATE
CHECKED: [signature]	DATE: 3/18/65		
ELECT. DES.	DATE	PM1231	Ø
MECH. DES.: [signature]	DATE: 3-18-65	SHEET	REV. LTR.

NOTES

THE CONTENTS OF THIS DRAWING ARE THE EXCLUSIVE PROPERTY OF THE TECHNICAL MATERIEL CORP. ITS UNAUTHORIZED USE OR REPRODUCTION IN WHOLE OR IN PART IS STRICTLY FORBIDDEN.