REQ. PER UNIT	USED ON MODEL	ASS'Y. NO.	DATE	PM-1026	Ø
1	DVC-1.		11-22-63		

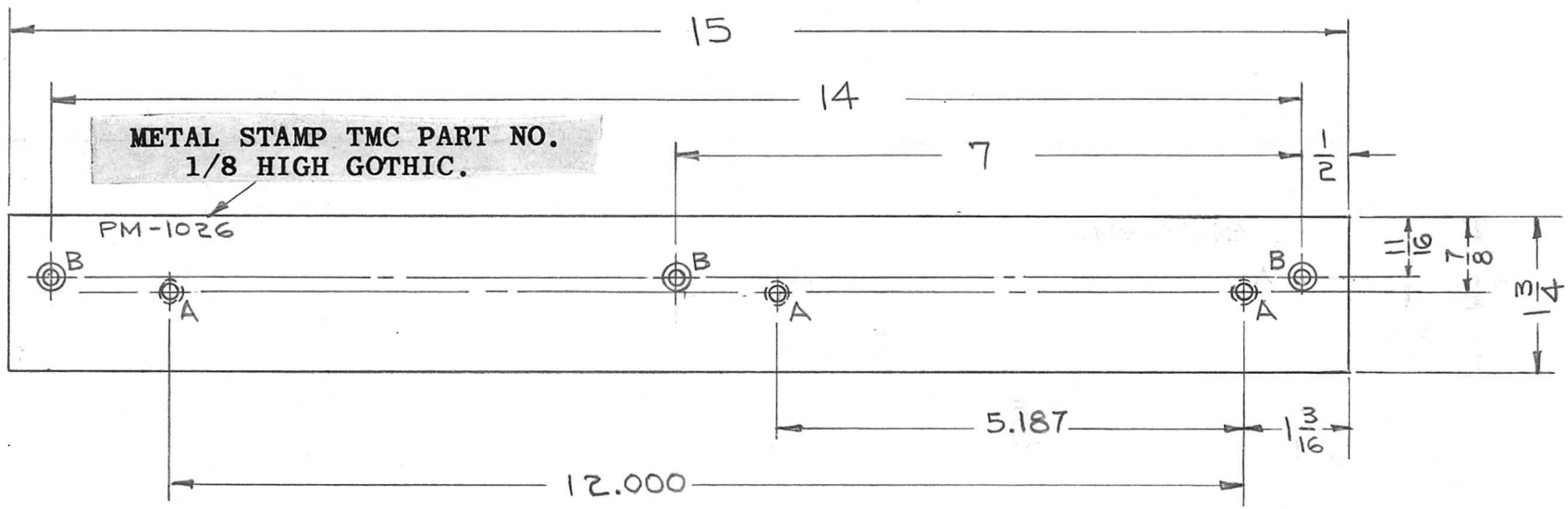

NOTES:

1. REMOVE ALL BURRS AND SHARP EDGES.

"A" HOLE # 10-32 THD 3 REQD

"B" HOLE .144 DIA, & CSK 82° TO .284 DIA 3 REQD

SYM	DESCRIPTION	DATE	CH. NO.	DRAFTS	CHECKER	ENG. APP.
0	ORIGINAL RELEASE FOR PRODUCTION	3-6-64		A.M.		
X1	MODEL WAS LPP-4 MATL WAS 5052-H32	12-26-63	X1	[signature]	[signature]	[signature]

UNLESS OTHERWISE SPECIFIED DIMENSIONS ARE IN INCHES AND INCLUDE CHEMICALLY APPLIED OR PLATED FINISHES

SCALE 1/2

DECIMALS .X ±.05 .XX ±.01 .XXX ±.005 — TOLERANCES — FRACTIONS ± 1/64 ANGLES ± 0° 30′

CODE A

REQ.	ITEM	PART NO.	I. JOHNSON DESCRIPTION	SYMBOL
		3/8 THK	THE TECHNICAL MATERIEL CORP. MAMARONECK. NEW YORK	
		STOCK SIZE		
		ALUMINUM	PLATE, MOUNTING, RIGHT SIDE. TRACK & SLIDE	
		MATERIAL		

TYPE & TEMPER	HEAT TREAT. SPEC.	DRAWN	CHECKED	FINAL APPROVAL
2024-T4	—	[signature]	[signature]	[signature] 3/5/64

FINISH & SPEC. NO.	ELEC. DES. APP.	MECH. DES. APP.	PM-1026	Ø
S-404 YEL IRIDITE		[signature]		