IF IT IS FOUND DESIRABLE TO CHANGE ANY TOLERANCE OR OTHER DETAIL SPECIFIED ON THIS DRAWING NOTIFY THE PURCHASER PROMPTLY.

MAXIMUM ALLOWABLE TOLERANCES HAVE BEEN DETERMINED AND DEVIATIONS WILL BE CAUSE FOR REJECTION. REMOVE ALL BURRS AND SHARP EDGES

MS-697 A

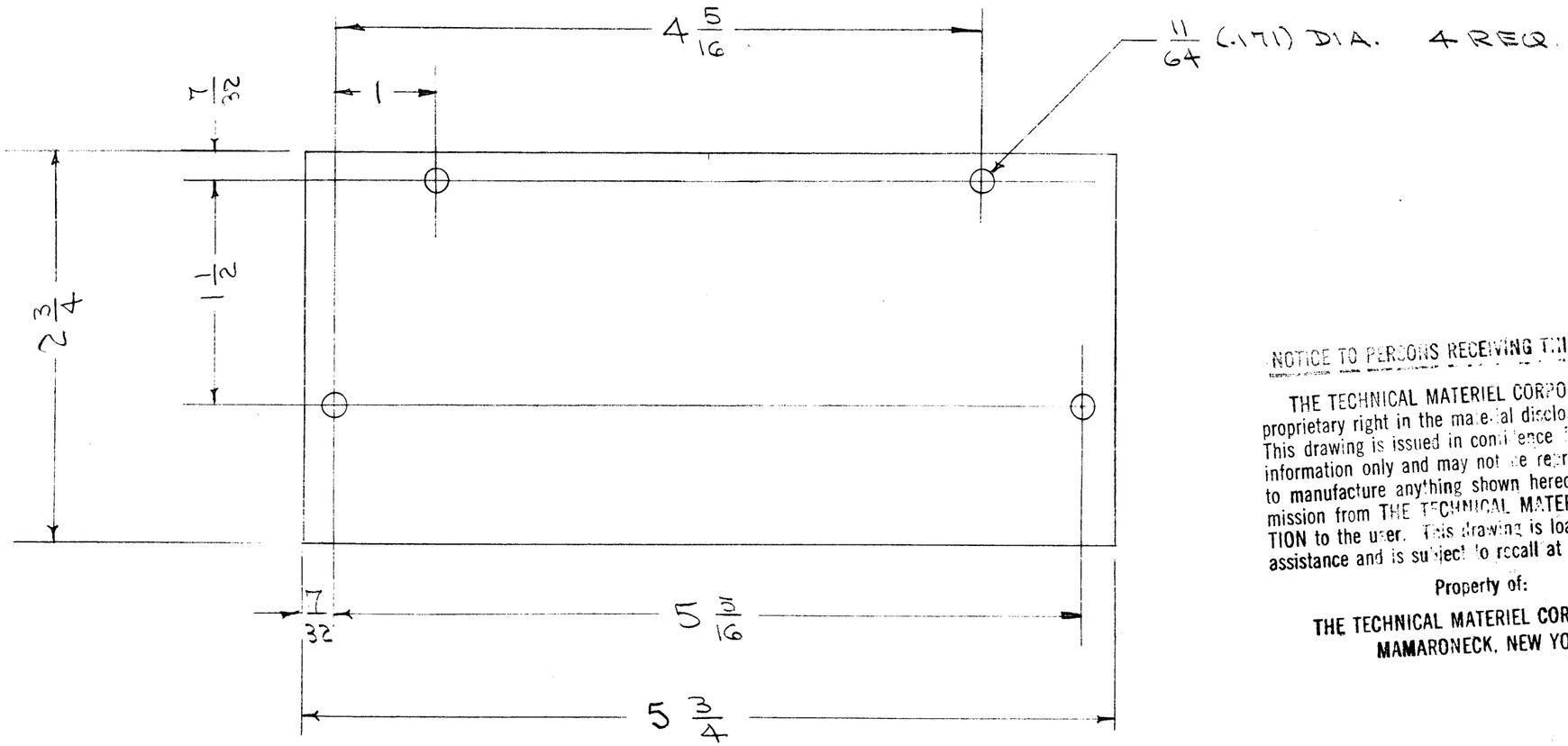

NOTICE TO PERSONS RECEIVING THIS DRAWING

THE TECHNICAL MATERIEL CORPORATION claims proprietary right in the material disclosed hereon. This drawing is issued in confidence for engineering information only and may not be reproduced or used to manufacture anything shown hereon without permission from THE TECHNICAL MATERIEL CORPORATION to the user. This drawing is loaned for mutual assistance and is subject to recall at any time.

Property of:

THE TECHNICAL MATERIEL CORPORATION
MAMARONECK, NEW YORK

ISSUE	ITEM	CHANGED FROM	DATE	CN. NO.	DRAFTS	CHECKER	ENG. APP.
A	1	S-404 WAS S-101	12/14/54	1001	AC		EMN

TOLERANCES

ALL OTHERS: DEC. DIM. ± ; FRAC. DIM. ± 1/64 ; ANGULAR DIM. ±

SCALE:

DRILL, PUNCH, COMMERCIAL STOCK SIZES AND MANUFACTURERS TOLERANCES ARE NOT INCLUDED.

REQ. PER UNIT	MODEL	PROJECT NO.	ASS'Y. NO.	DATE
1	RTF			9-23-55

USED ON

REQ.	ITEM	PART NO.	DESCRIPTION	SYMBOL
		.051	THE TECHNICAL MATERIEL CORP. MAMARONECK. NEW YORK	
STOCK SIZE				
ALUMINUM		—	END PLATE, MULTIPLIER	
MATERIAL		WEIGHT PER PC.	CHASSIS RTF GPT-750	
52S H32				
TYPE & TEMPER			CDD 9/23/55	12/20/55
			DRAWN	ELEC. DES. APP. / MECH. DES. APP.
HEAT TREAT. SPEC.			A. J. I.	
			CHECKED	FINAL APPROVAL
S-404 YELLOW IRIDITE			MS-697	A
FINISH & SPEC. NO.				

FORM—109