B	REVISIONS					
	SYM	DESCRIPTION	DATE	E.M.N. NO.	DRAFT	CHKD	APPD
MS4541	Ø	ORIGINAL RELEASE FOR PRODUCTION	4/27/65	[illegible]			
	A	① "C" CUTOUT ADDED	12/15/65	15445	[illegible]	[illegible]	[illegible]
	B	ADDED 4 EA. "A" HOLES —	4/25/66	16134	HCA	[illegible]	[illegible]

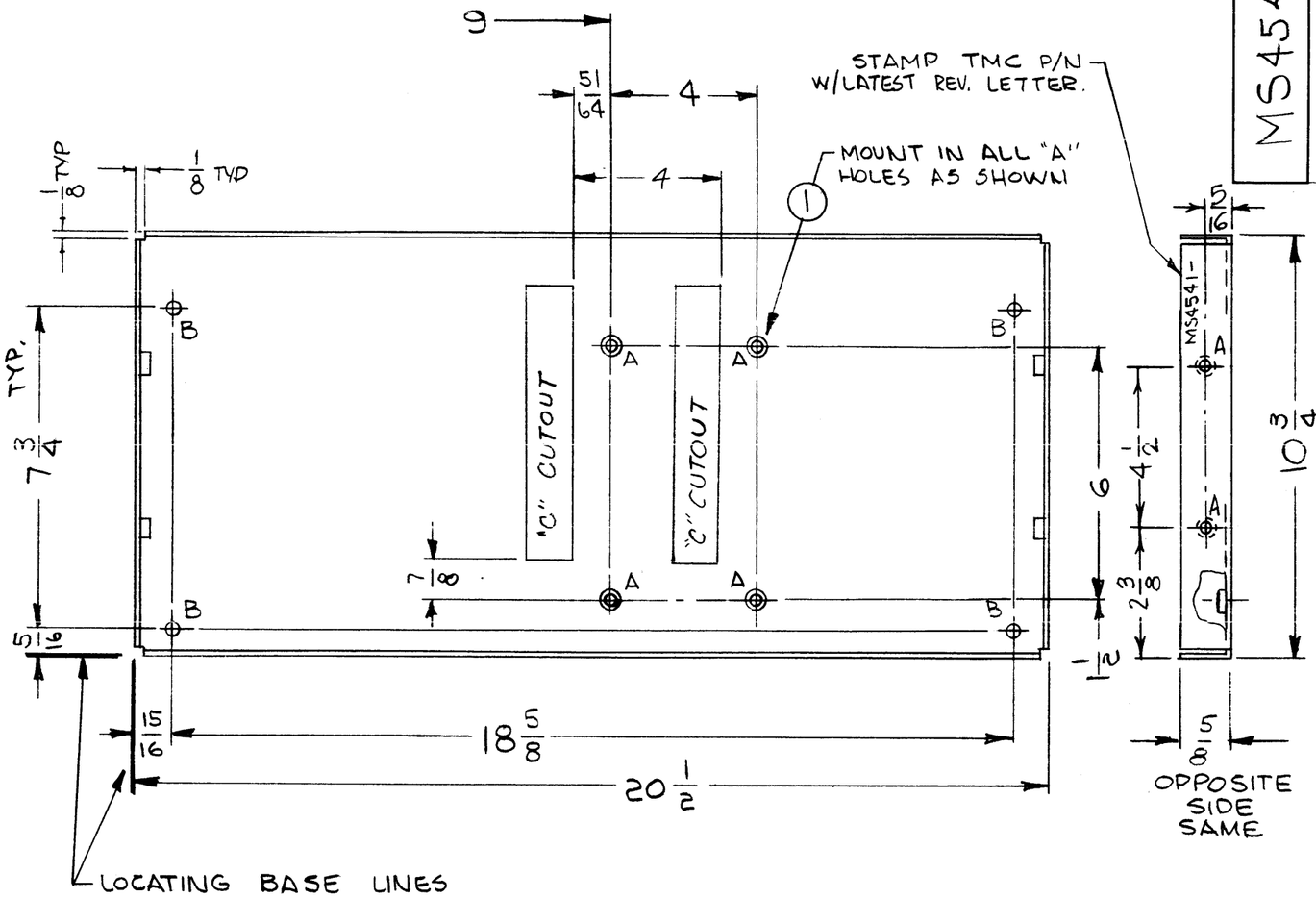

HOLE	DESCRIPTION	REQ.
A	.191 - .194 DIA.	8
B	15/64 DIA.	4
C	1-5/16 × 6-3/4 CUTOUT	2

UNLESS OTHERWISE SPECIFIED:

1. USE MATERIAL THICKNESS FOR MAXIMUM RADIUS ON ALL BENDS
2. ALL ANGULAR BENDS 90 DEGREES
3. REMOVE ALL BURRS AND SHARP EDGES
4. MOUNT INSERTS AFTER FINISHING

NOTES

1	RAK-21C	
Q'T'Y./UNIT	MODEL USED ON	ASS'Y. NO.
SCALE NONE	CODE A	

THE CONTENTS OF THIS DRAWING ARE THE EXCLUSIVE PROPERTY OF THE TECHNICAL MATERIEL CORP. ITS UNAUTHORIZED USE OR REPRODUCTION IN WHOLE OR IN PART IS STRICTLY FORBIDDEN.

REQ'D.	ITEM	PART NUMBER	DESCRIPTION	SYMBOL
8	1	NT129-632-4	NUT, PLAIN, SPLINE	A

F. EATON — LIST OF MATERIAL

MATERIAL .081, ALUMINUM 5052-H32

FINISH S404-YEL. IRIDITE

THE TECHNICAL MATERIEL CORP.
MAMARONECK, NEW YORK

TITLE BRACKET, TAPE REEL

UNLESS OTHERWISE SPECIFIED
DIMENSIONS ARE IN INCHES AND INCLUDE CHEMICALLY APPLIED OR PLATED FINISHES

DECIMALS	TOLERANCES	FRACTIONS
.X ± .05		± 1/64
.XX ± .01		ANGLES
.XXX ± .005		± 0° 30'

DRAWN [illegible]	DATE 4-23-65	FINAL APPROVAL F. E. Eaton	DATE 4/28/65
CHECKED JCB	DATE 4/27/65	MS4541	B
ELECT. DES.	DATE		
MECH. DES. MP	DATE 4-28-65	SHEET	REV. LTR.

TMC FORM 109

REPROVEL NO. 440H 23858