MS-2572

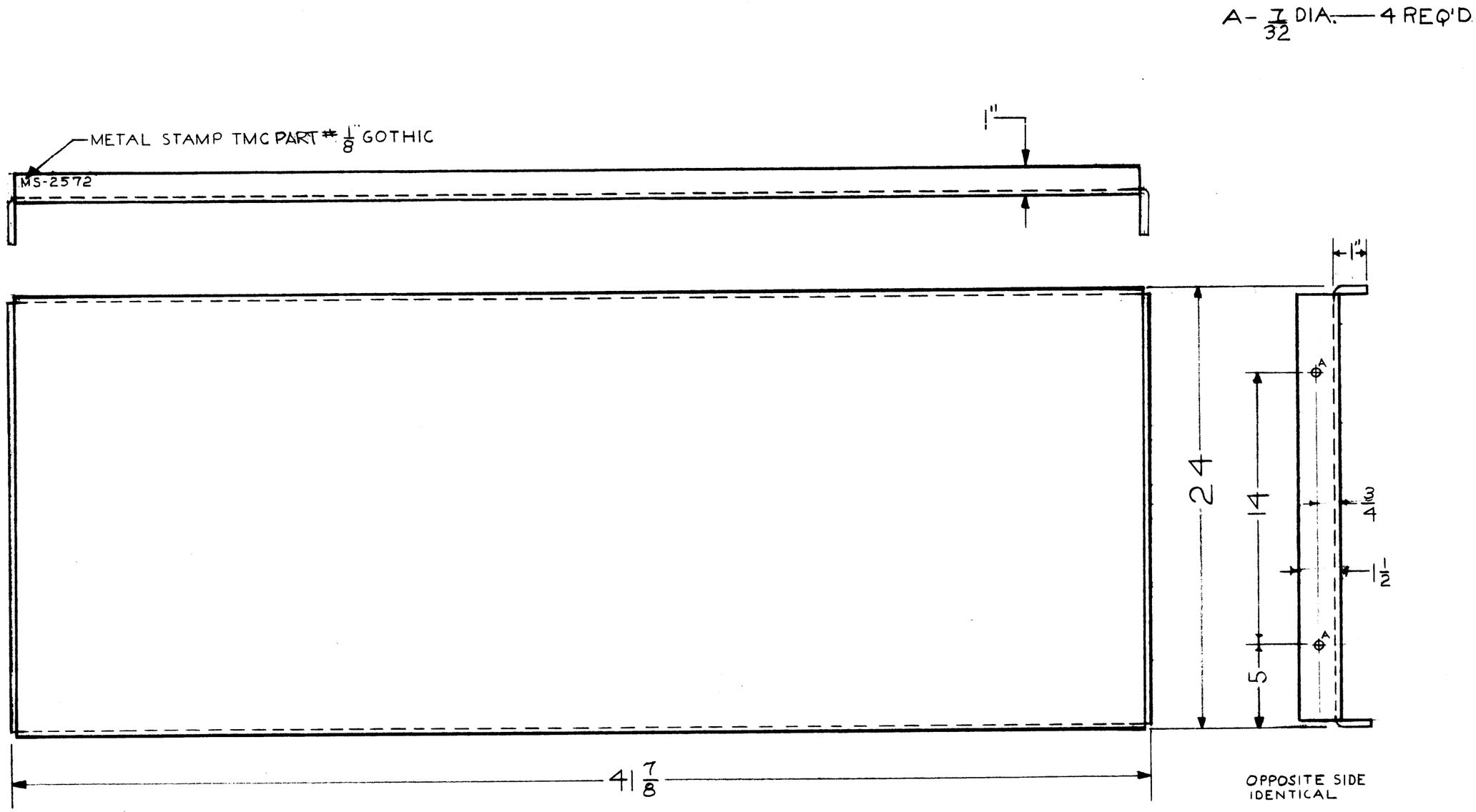

SYM	DESCRIPTION	DATE	CH. NO.	DRAFTS	CHECKER	ENG. APP.

UNLESS OTHERWISE SPECIFIED:
DIMENSIONS ARE IN INCHES
TOLERANCES ON
FRACTIONS ± 1/64 DECIMALS ± .005 ANGLES ± 1/2°

SCALE:

MAXIMUM ALLOWABLE TOLERANCES HAVE BEEN DETERMINED AND ANY DEVIATIONS WILL BE CAUSE FOR REJECTION. REMOVE ALL BURRS AND SHARP EDGES

REQ. PER UNIT	MODEL	SECTION	ASS'Y. NO.	DATE
1	TER-25K/50			9-16-61

USED ON

REQ.	ITEM	PART NO.	DESCRIPTION	SYMBOL
			THE TECHNICAL MATERIEL CORP. MAMARONECK, NEW YORK	

STOCK SIZE: 1/8

MATERIAL: ALUMINUM

PLATE, CAPACITOR

TYPE & TEMPER: 5052-H32

HEAT TREAT. SPEC.:

FINISH & SPEC. NO.: S404 YELLOW IRRIDITE

DRAWN	CHECKER	FINAL APPROVAL
LL	AB	AB
ELEC. DES. APP.	MECH. DES. APP.	MS-2572
aa		

TMC FORM NO. 1 9

DEFIANCE NO. 1020 26252