IF IT IS FOUND DESIRABLE TO CHANGE ANY TOLERANCE OR OTHER DETAIL SPECIFIED ON THIS DRAWING NOTIFY THE PURCHASER PROMPTLY.

MAXIMUM ALLOWABLE TOLERANCES HAVE BEEN DETERMINED AND DEVIATIONS WILL BE CAUSE FOR REJECTION. REMOVE ALL BURRS AND SHARP EDGES

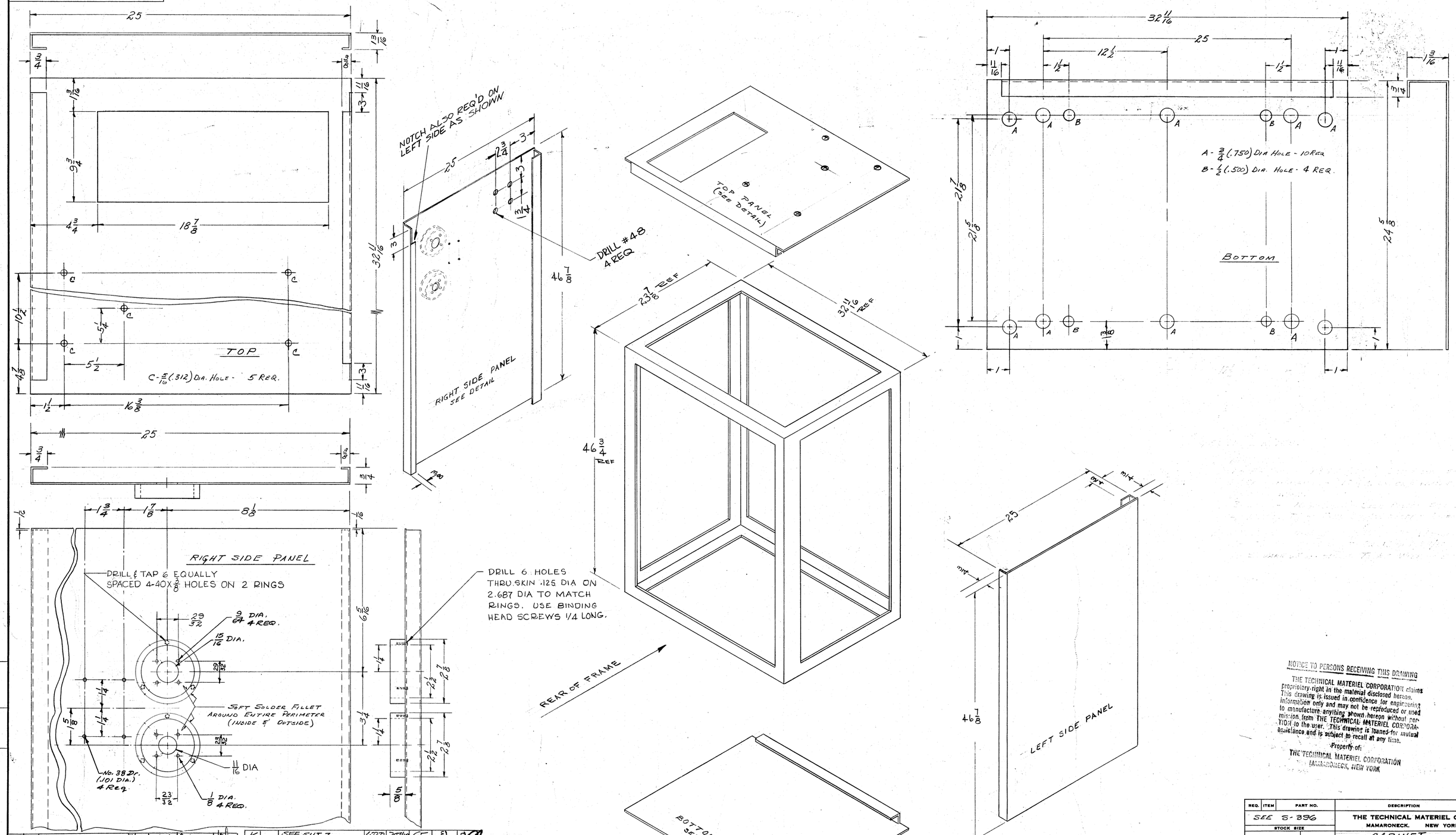

ISSUE	ITEM	CHANGED FROM	DATE	CH. NO.	DRAFTS	CHECKER	ENG. APP.
C	1	3" NOTCH Added	11/12/58				
B	1	BOTTOM PLATE DIM. Clarified	11/12/58				
A	1	ADDED 5 "C" HOLES	10/30/58				

TOLERANCES — SCALE: C/O

ALL OTHERS: DEC. DIM. ± / FRAC. DIM. ± / ANGULAR DIM. ± } SEE S-396

DRILL, PUNCH, COMMERCIAL STOCK SIZES AND MANUFACTURERS TOLERANCES ARE NOT INCLUDED.

ISS.	ITEM	REVISION	DATE	CH. NO.	DRAFT.	CHKR.	APP.
K		SEE SHT. 7	6-22-72	20740	GE		
J	#	6 4-40 X 3/8 HOLES TAPPED ON RINGS	3-9-66	15893	LHW		
H	1	SEE SHEET 11 OF 12	2-15-63	8242			
G	1	Right Side Panel #48 Dr. Holes Added	11-16-61	5807	RLL		
F	#	Revision Letter Clarified	1/31/61	4019	PAM		
D	1	Four No. 38 Drill Holes Added to Right Side Panel	12/18/58	586	HG		

REQ. PER UNIT	MODEL	PROJECT NO.	ASS'Y. NO.	DATE
1	CAB-7			10-10-58

USED ON

REQ.	ITEM	PART NO.	DESCRIPTION	SYMBOL
SEE S-396			THE TECHNICAL MATERIEL CORP. MAMARONECK, NEW YORK	
STOCK SIZE			CABINET	
MATERIAL	WEIGHT PER PC.			
TYPE & TEMPER			10-8-58 DRAWN	ELEC. DES. APP. / MECH. DES. APP. RFB
HEAT TREAT. SPEC.			CHECKED	FINAL APPROVED
SEE S-396			SHEET 1 OF 12	MS-1360 K
FINISH & SPEC. NO.				

NOTICE TO PERSONS RECEIVING THIS DRAWING

THE TECHNICAL MATERIEL CORPORATION claims proprietary right in the material disclosed hereon. This drawing is issued in confidence for engineering information only and may not be reproduced or used to manufacture anything shown hereon without permission from THE TECHNICAL MATERIEL CORPORATION to the user. This drawing is loaned for mutual assistance and is subject to recall at any time.

Property of:
THE TECHNICAL MATERIEL CORPORATION
MAMARONECK, NEW YORK

MS-1360 K

FORM—111 D1