MR-151 B

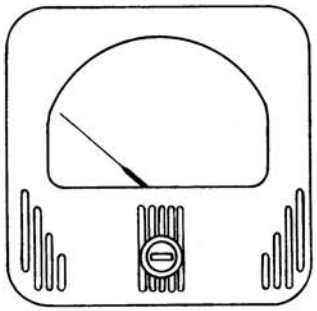

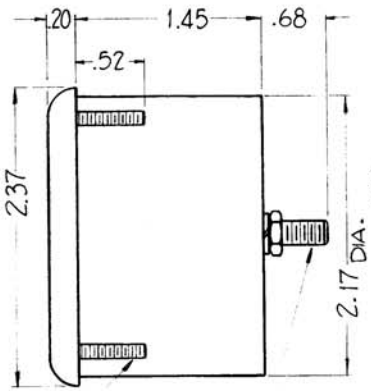

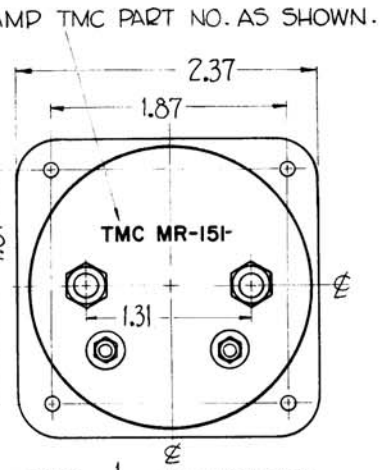

NOTE: METER FRONT MUST BE A BLACK MATT FINISH, WITH LINE DESIGN AS SHOWN.

– ④ MTG. STUDS 4-40 THREADS

– ② TERMINALS, $\frac{1}{4}$ – 28 THREADS.

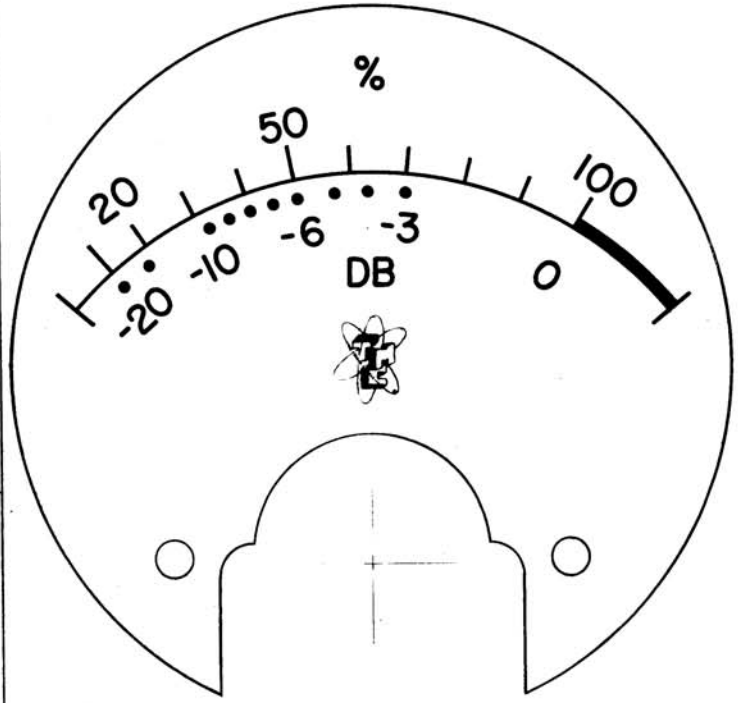

SCALE = 3X

SPECIFICATIONS

CASE – BLACK PHENOLIC, METER FRONT WITH MATTE FINISH.

MOVEMENT – 0 – 25UA. ACCURACY AT FULL SCALE ± 2%

APPROX. RESISTANCE – 2200 OHMS.

POINTER TYPE – KNIFE EDGE

ALL NECESSARY MOUNTING AND TERMINAL HARDWARE SUPPLIED BY MFG.

CALIBRATED FOR NON-MAGNETIC PANEL.

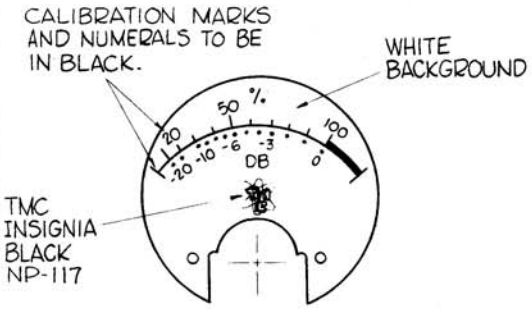

FULL SCALE

SYM	DESCRIPTION	DATE	CH. NO.	DRAFTS	CHECKER	ENG. APP.
B	ACCURACY & CALIBRATION NOTES ADDED ON SPECS, CASE WAS STD. SIMPSON No. 127	7-9-63	9496		N.P.	
A	MTG STUDS WERE 4-36 THD	6-12-63	9243			

UNLESS OTHERWISE SPECIFIED:
DIMENSIONS ARE IN INCHES
TOLERANCES ON
FRACTIONS ± 1/64 DECIMALS ± .005 ANGLES ± 1/2°

S401-44(127)

SCALE: NONE

MAXIMUM ALLOWABLE TOLERANCES HAVE BEEN DETERMINED AND ANY DEVIATIONS WILL BE CAUSE FOR REJECTION. REMOVE ALL BURRS AND SHARP EDGES

REQ. PER UNIT	MODEL	SECTION	ASS'Y. NO.	DATE
1	GPE-1			6-6-61

USED ON

REQ.	ITEM	PART NO.	DESCRIPTION	SYMBOL

STOCK SIZE

MATERIAL

TYPE & TEMPER | HEAT TREAT. SPEC.

FINISH & SPEC. NO.

THE TECHNICAL MATERIEL CORP.
MAMARONECK, NEW YORK

METER, OUTPUT

DRAWN: John C. Biele | CHECKER | FINAL APPROVAL

ELEC. DES. APP. | MECH. DES. APP.

MR-151 B

TMC FORM NO. 109

DEFIANCE NO. 1020