REQ. PER UNIT	USED ON MODEL	ASS'Y. NO.	DATE	LD2114	Ø
1	LSCA-1		7-26-66		

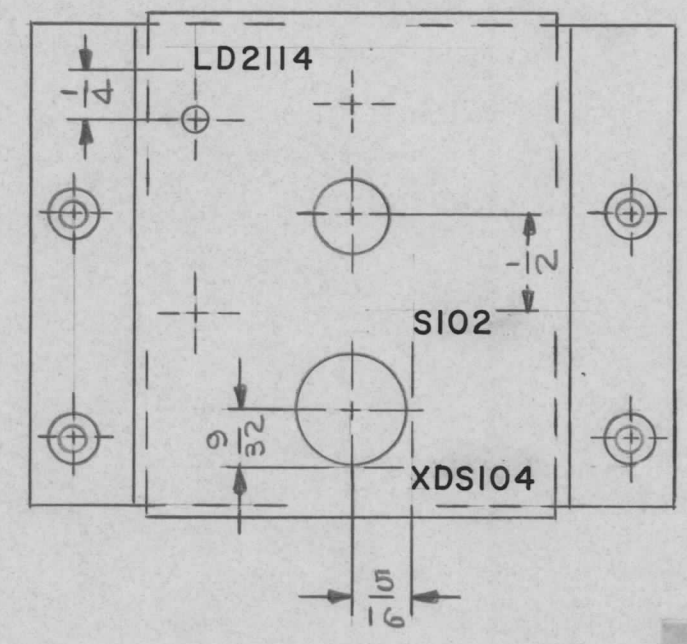

— UNLESS OTHERWISE SPECIFIED —

1- MARKING PROCESS: AS PER TMC SPECIFICATION S-727.

2- LETTERING: 1/8 HIGH BLACK GOTHIC, LOCATED AS SHOWN.

REF. MS 4989

SYM	DESCRIPTION	DATE	CH. NO.	DRAFTS	CHECKER	ENG. APP.
Ø	ORIGINAL RELEASE FOR PRODUCTION	9.12.66				

UNLESS OTHERWISE SPECIFIED
DIMENSIONS ARE IN INCHES AND INCLUDE CHEMICALLY APPLIED OR PLATED FINISHES

SCALE 1/1

TOLERANCES
DECIMALS .X ±.05 .XX ± .01 .XXX ±.005
FRACTIONS ± 1/64
ANGLES ± 0° 30′

CODE

REQ.	ITEM	PART NO.	DESCRIPTION	SYMBOL

STOCK SIZE

MATERIAL

TYPE & TEMPER | HEAT TREAT. SPEC.

FINISH & SPEC. NO.

EATON

THE TECHNICAL MATERIEL CORP.
MAMARONECK, NEW YORK

MARKING - BRACKET, LEDEX SWITCH

DRAWN	CHECKED	FINAL APPROVAL
JL	9/9/66	E C Cato 9/9/66

ELEC. DES. APP. | MECH. DES. APP.

LD2114 Ø

TMC FORM 108-A

REPROVEL NO. 440H 23845