LD-289 A

NOTICE TO PERSONS RECEIVING THIS DRAWING

THE TECHNICAL MATERIEL CORPORATION claims proprietary right in the material disclosed hereon. This drawing is issued in confidence for engineering information only and may not be reproduced or used to manufacture anything shown hereon without permission from THE TECHNICAL MATERIEL CORPORATION to the user. This drawing is loaned for mutual assistance and is subject to recall at any time.

Property of:

THE TECHNICAL MATERIEL CORPORATION
MAMARONECK, NEW YORK

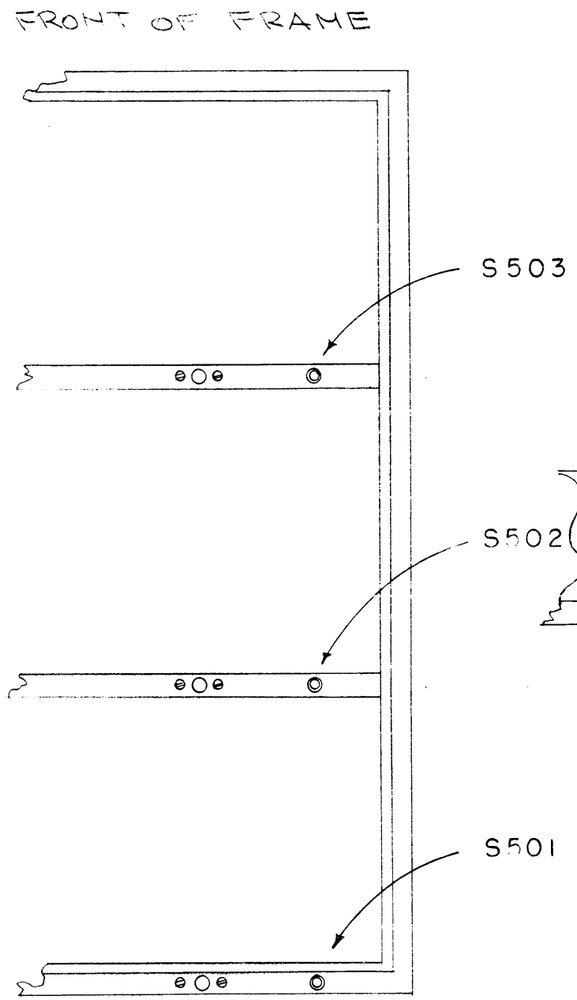

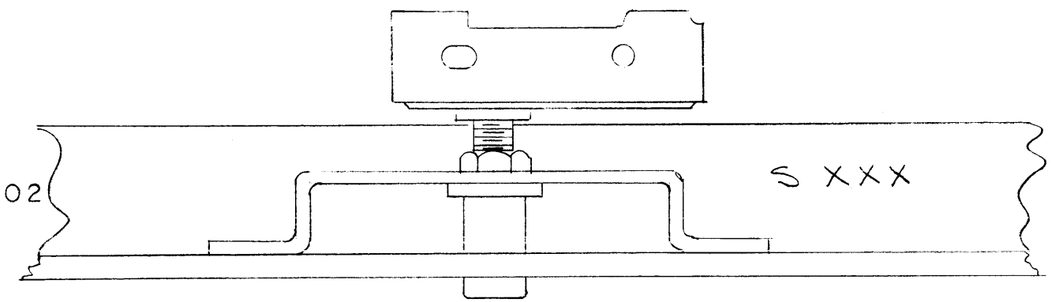

STAMPING DETAIL
STAMP TOP OF CROSS MEMBERS

LETTERING TO BE 1/8 HIGH WHITE GOTHIC

ISSUE	ITEM	CHANGED FROM	DATE	CH. NO.	DRAFTS	CHECKER	ENG. APP.
A	1	STAMPING WAS BLK.	8/24/56	1	CDD	[signature]	[signature]

TOLERANCES

DEC. DIM. ±
FRAC. DIM. ±
ANGULAR DIM. ±

SCALE:

MAXIMUM ALLOWABLE TOLERANCES HAVE BEEN DETERMINED AND ANY DEVIATIONS WILL BE CAUSE FOR REJECTION.
REMOVE ALL BURRS AND SHARP EDGES

REQ. PER UNIT	MODEL	PROJECT NO.	ASS'Y. NO.	DATE
1	CAB/FRAME	271		5-7-56

USED ON

REQ.	ITEM	PART NO.	DESCRIPTION	SYMBOL
			THE TECHNICAL MATERIEL CORP. MAMARONECK. NEW YORK	
		STOCK SIZE	LETTERING, INTERLOCK	
		MATERIAL	SWITCHES CAB/FRAME GPT-750	
			CDD 5/7/56	A. J. J.
		TYPE & TEMPER / HEAT TREAT. SPEC.	DRAWN / CHECKED	FINAL APPROVAL
		FINISH & SPEC. NO.	ELEC. DES. APP. / MECH. DES. APP.	LD-289 A