IF IT IS FOUND DESIRABLE TO CHANGE ANY TOLERANCE OR OTHER DETAIL SPECIFIED ON THIS DRAWING NOTIFY THE PURCHASER PROMPTLY.

MAXIMUM ALLOWABLE TOLERANCES HAVE BEEN DETERMINED AND DEVIATIONS WILL BE CAUSE FOR REJECTION. REMOVE ALL BURRS AND SHARP EDGES

LETTER HEIGHT	DEPTH OF STROKE	WIDTH OF STROKE
3/32	.010	.015
1/8	.010	.020

A

LD-212

NOTICE TO PERSONS RECEIVING THIS DRAWING

THE TECHNICAL MATERIEL CORPORATION claims proprietary right in the material disclosed hereon. This drawing is issued in confidence for engineering information only and may not be reproduced or used to manufacture anything shown hereon without permission from THE TECHNICAL MATERIEL CORPORATION to the user. This drawing is loaned for mutual assistance and is subject to recall at any time.

Property of:

THE TECHNICAL MATERIEL CORPORATION
MAMARONECK, NEW YORK

NOTE

HFO, IFO, BFO, VMO WILL BE 3/32 HIGH

ALL LETTERING WILL BE WHITE FILLED GOTHIC

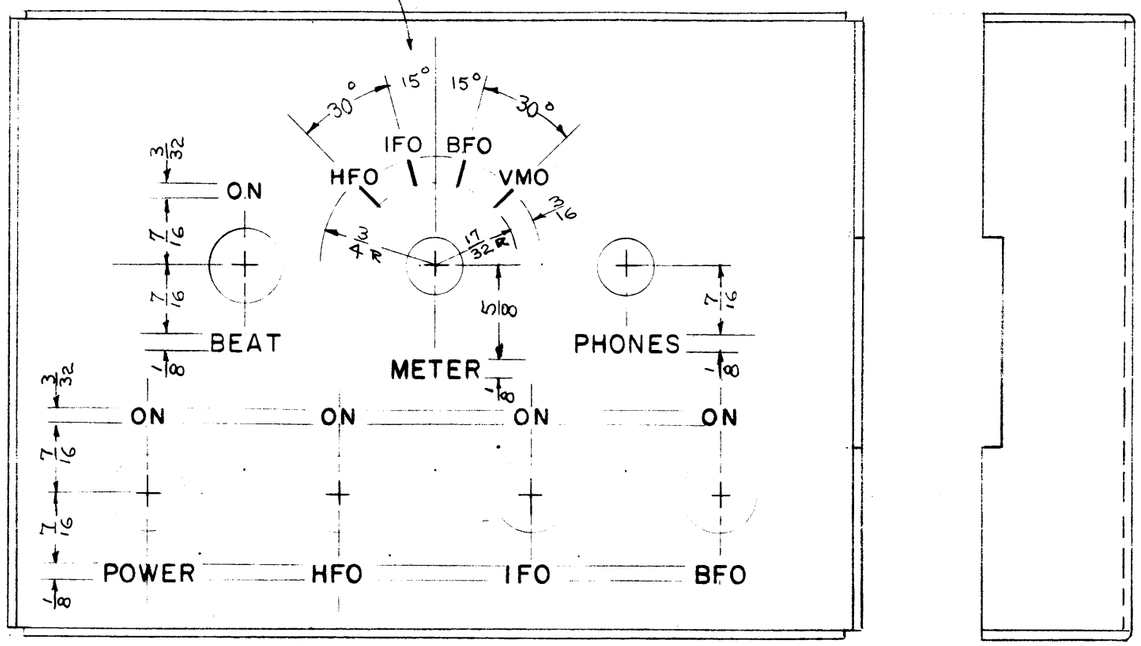

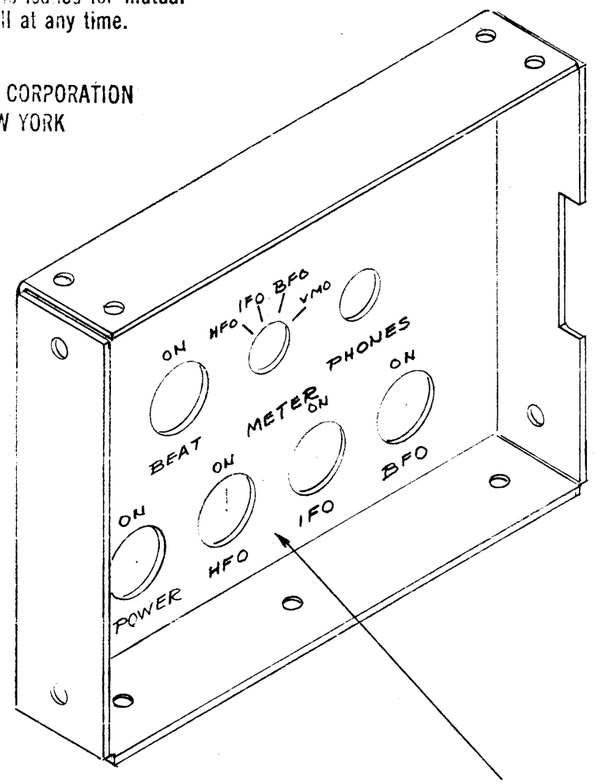

ENGRAVING THIS SIDE

REF MS-603

REQ.	ITEM	PART NO.	DESCRIPTION	SYMBOL
			THE TECHNICAL MATERIEL CORP. MAMARONECK. NEW YORK	
STOCK SIZE			ENGRAVING, CONTROL PANEL	
MATERIAL		WEIGHT PER PC.		
TYPE & TEMPER			DRAWN 1-27-55 / ELEC. DES. APP. / MECH. DES. APP.	
HEAT TREAT. SPEC.			CHECKED 1-27-55 / FINAL APPROVAL A.I.J.	
FINISH & SPEC. NO.			LD-212	A

ISSUE	ITEM	CHANGED FROM	DATE	CN. NO.	DRAFTS	CHECKER	ENG. APP.
A	1	ENG. CHART ADDED	4/28/55	1	[illegible]	[illegible]	[illegible]

TOLERANCES

SCALE: FULL

ALL OTHERS: DEC. DIM. ± ; FRAC. DIM. ± 1/64 ; ANGULAR DIM. ± 1°

DRILL, PUNCH, COMMERCIAL STOCK SIZES AND MANUFACTURERS TOLERANCES ARE NOT INCLUDED.

REQ. PER UNIT	MODEL	PROJECT NO.	ASS'Y. NO.	DATE
1	VOX-2			1-27-55
1	VOX-1			1-27-55

USED ON

FORM—109