THE CONTENTS OF THIS DRAWING ARE THE EXCLUSIVE PROPERTY OF THE TECHNICAL MATERIEL CORP. ITS UNAUTHORIZED USE FOR REPRODUCTION IN WHOLE OR IN PART IS STRICTLY FORBIDDEN.

REQ. PER UNIT	USED ON MODEL	ASS'Y. NO.	DATE		
1	VLR-1, LFS-1	AC-175	6-3-63	JG 107	A

TMC PART NO.	"A" DIA.	"B" DIA.	"C" DIA.	"D" DIA.	"E"	"F" DIA	"G" HOLES	"H"
JG 107 -1	0.8450	1.25	0.8430	27/32	25/32	11/16	4 SPACED 90°	3/16
JG 107 -2	0.8450	1.25	0.8430	27/32	25/32	1/16	5 SPACED 72°	3/16
JG 107 -3	1.2670	1 11/16	1.2650	1 17/64	1 5/16	1 1/16	8 SPACED 45°	3/8
JG 107-4	1.2520	1 11/16	1.250	1.255	1 5/16	1 1/16	8 SPACED 45°	3/8

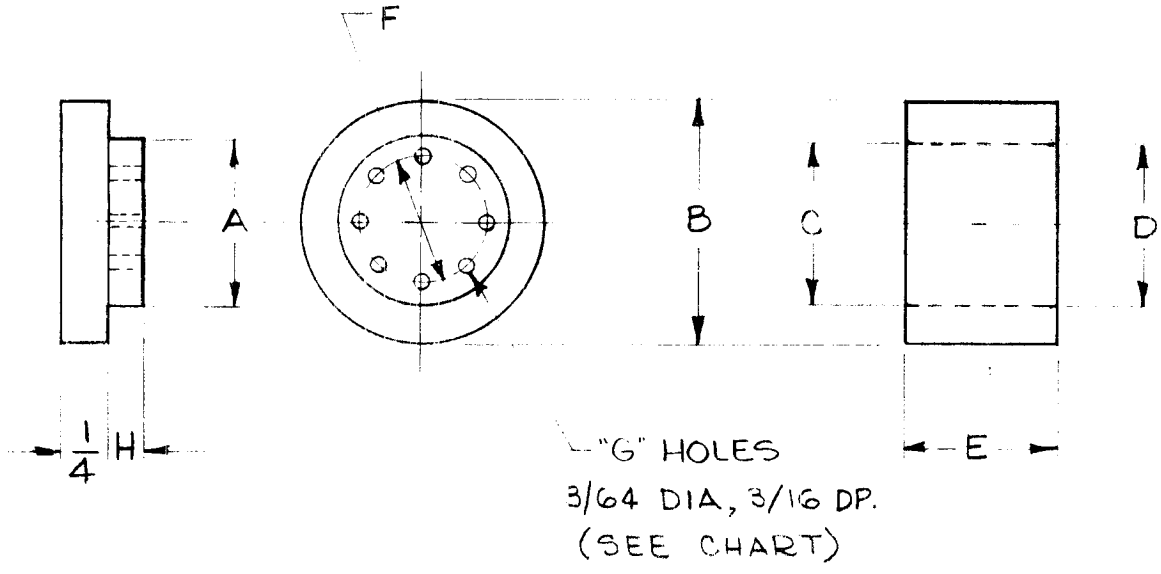

SYM	DESCRIPTION	DATE	CH. NO.	DRAFTS	CHECKER	ENG. APP.
4	LINE JG 107-4 ADDED	8/16/65	14675	[illegible]	[illegible]	[illegible]
0	ORIGINAL RELEASE FOR PRODUCTION	5-11-64	0	A.M.	[illegible]	

UNLESS OTHERWISE SPECIFIED
DIMENSIONS ARE IN INCHES AND INCLUDE CHEMICALLY APPLIED OR PLATED FINISHES

SCALE: Do Not Scale

TOLERANCES: DECIMALS .X ± .05, .XX ± .01, .XXX ± .005; FRACTIONS ± 1/64; ANGLES ± 0° 30'

CODE: A

REQ.	ITEM	PART NO.	DESCRIPTION	SYMBOL
			M. GELLMAN	

STOCK SIZE: —//—

MATERIAL: POLYTETRAFLUOROETHYLENE

TYPE & TEMPER: —//—

HEAT TREAT. SPEC.: —//—

FINISH & SPEC. NO.: —//—

THE TECHNICAL MATERIEL CORP.
MAMARONECK. NEW YORK

MOLD, POTTING

DRAWN: [illegible] CHECKED: [illegible] FINAL APPROVAL: [illegible]

ELEC. DES. APP.: [illegible] MECH. DES. APP.: [illegible]

JG 107 A

TMC FORM NO. 108-A

STANDARD DRAWING

OGILVIE PRESS, INC., BROOKLYN 17, N. Y. REPROVEL NO. 400H 3787