IN-1062 Ø

DEPTH OF CV 171 IS 12 3/4"
DEPTH OF RD 92 IS 14 3/4"

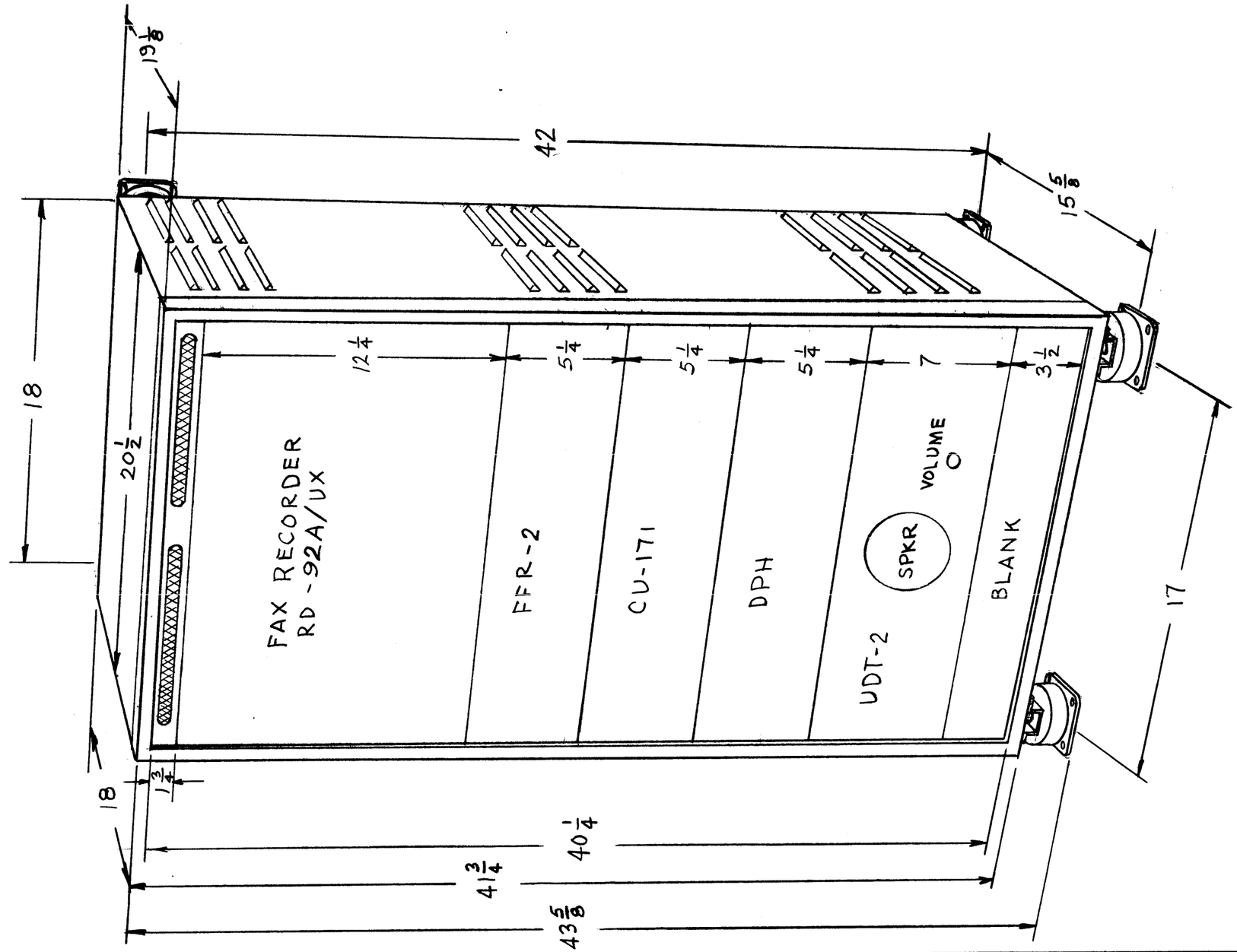

ISSUE	ITEM	CHANGED FROM	DATE	CH. NO.	DRAFTS	CHECKER	ENG. APP.
Ø		ORIGINAL RELEASE	8/14/69		Ø		

TOLERANCES
DEC. DIM. ±
FRAC. DIM. ±
ANGULAR DIM. ±

SCALE:
MAXIMUM ALLOWABLE TOLERANCES HAVE BEEN DETERMINED AND ANY DEVIATIONS WILL BE CAUSE FOR REJECTION.
REMOVE ALL BURRS AND SHARP EDGES

REQ. PER UNIT	MODEL	PROJECT NO.	ASS'Y. NO.	DATE
	USED ON			

REQ.	ITEM	PART NO.	DESCRIPTION	SYMBOL
		STOCK SIZE	THE TECHNICAL MATERIEL CORP. MAMARONECK, NEW YORK	
		MATERIAL	RAK-8	
TYPE & TEMPER	HEAT TREAT. SPEC.		DRAWN: MJT 2-4-59	CHECKED
FINISH & SPEC. NO.			ELEC. DES. APP.	MECH. DES. APP.

FINAL APPROVAL 8/14/69

IN-1062 Ø

FORM 1 9-A