REQ. PER UNIT	USED ON MODEL	ASS'Y. NO.	DATE	CV-102	D

ELECTRICAL DATA

1. CAPACITANCE RANGE MIN-0.8; MAX.-10 mmf.
2. DIELECTRIC-QUARTZ
   TUNING PISTON & ADJ. SCREW-INVAR
3. TEMP. COEEFICIENT OF CAP. MEASURED AT
   0.1. MC ± 50 PPM/C°
4. OPERATING TEMP. - -55° TO +150° C
5. WORKING VOLTS - 3000 V.D.C.

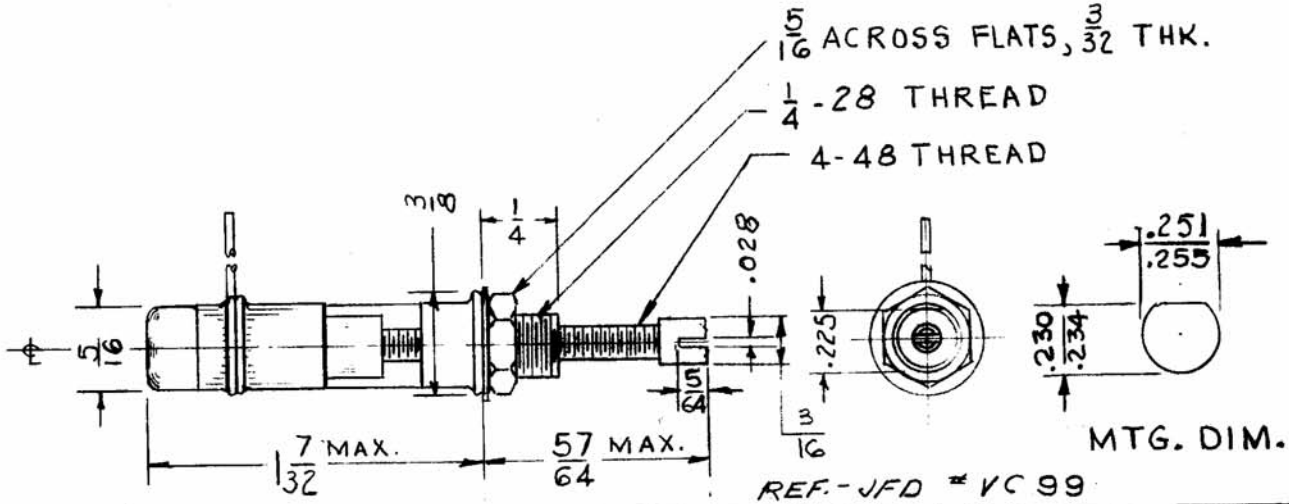

ISSUE	ITEM	CHANGED FROM	DATE	CH. NO.	DRAFTS	CHECKER	ENG. APP.
D	1	.230/.234 WAS .237, .251/.255 WAS .257	7.31.64	11998	WB	[illegible]	JC
C	1	MECH. STOP ADDED TO DWG	1/15/64	10720	[illegible]	[illegible]	WB
B	1	ITEM 3 OF ELEC. DATA REVISED	1-2-62	6135	E.E.	[illegible]	[illegible]
A	1	DWG. CHG'D TO AGI WITH SUPL'R DWG.	6/20/58	1	[illegible]		JER

TOLERANCES [illegible]

SCALE: [illegible]

DEC. DIM. ±
FRAC. DIM. ±
ANGULAR DIM. ±

MAXIMUM ALLOWABLE TOLERANCES HAVE BEEN DETERMINED AND ANY DEVIATIONS WILL BE CAUSE FOR REJECTION.
REMOVE ALL BURRS AND SHARP EDGES

REQ.	ITEM	PART NO.	DESCRIPTION	SYMBOL
		[illegible]	THE TECHNICAL MATERIEL CORP. MAMARONECK. NEW YORK	
		STOCK SIZE	CAPACITOR, VARIABLE, GLASS	
		[illegible]		
		MATERIAL		

TYPE & TEMPER	HEAT TREAT. SPEC.	DRAWN	CHECKED	FINAL APPROVAL
[illegible]	[illegible]	5/19/58 [illegible]	[illegible]	[illegible] JER

FINISH & SPEC. NO.	ELEC. DES. APP.	MECH. DES. APP.	CV-102	D
[illegible]	[illegible]			