CU 10015

ISSUE	ITEM	CHANGED FROM	DATE	CN. NO.	DRAFTS	CHECKER	ENG. APP.	REQ.	ITEM	PART NO.	DESCRIPTION	SYMBOL
Ø		REL. TO PROD.	9/4/68		S.B	[signature]	[signature]					

TMC PART #	MFGR PART #	L	M
CU10015-1	11909-300-1	2	1.750
-2	-2	2 1/2	2.250
-3	-3	3	2.750
-4	-4	3 1/2	3.250
-5	-5	4	3.750

STANDARD DRAWING

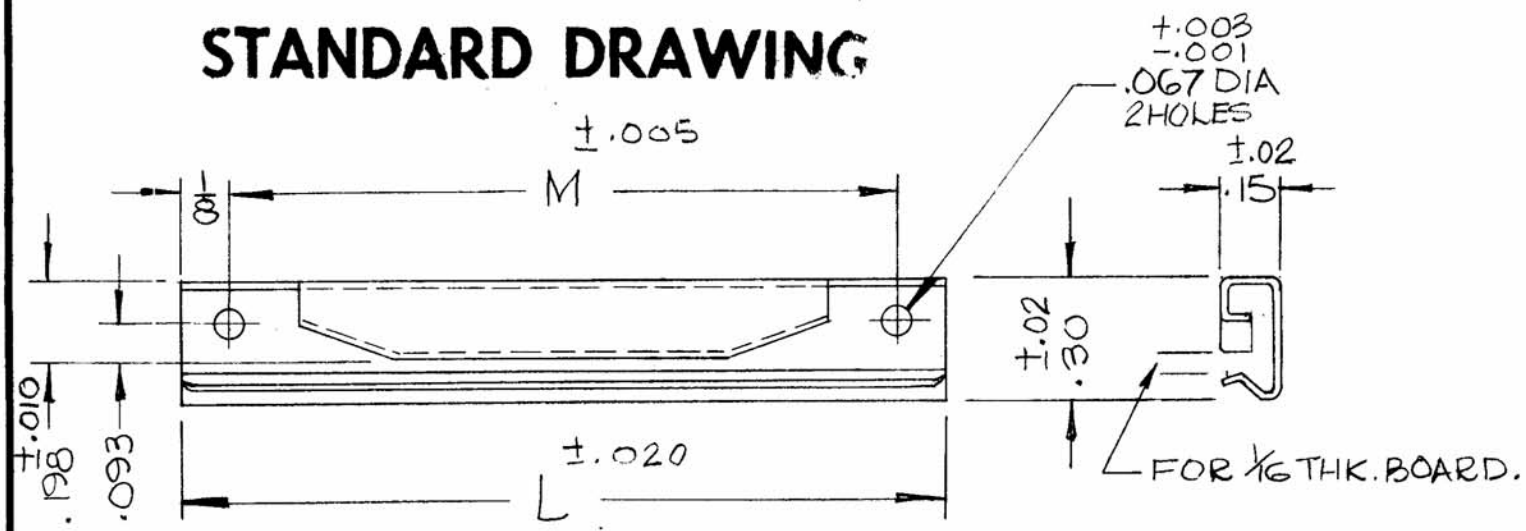

MFGR # S10045-69

MODEL	PROJECT NO.	ASS'Y. NO.	DATE
			9/4/68

USED ON

MAXIMUM ALLOWABLE TOLERANCES HAVE BEEN DETERMINED AND DEVIATIONS WILL BE CAUSE FOR REJECTION. REMOVE ALL BURRS AND SHARP EDGES

IF IT IS FOUND DESIRABLE TO CHANGE ANY TOLERANCE OR OTHER DETAIL SPECIFIED ON THIS DRAWING NOTIFY THE PURCHASER PROMPTLY.

TOLERANCES

SCALE

ALL OTHERS: DEC. DIM. ±; FRAC. DIM. ±; ANGULAR DIM. ±

DIMENSIONS IN INCHES UNLESS OTHERWISE SPECIFIED

DRILL, PUNCH, COMMERCIAL STOCK SIZES AND MANUFACTURERS TOLERANCES ARE NOT INCLUDED.

STOCK SIZE: .010

MATERIAL: BERYLLIUM COPPER

WEIGHT PER PC.

TYPE & TEMPER

HEAT TREAT. SPEC.

FINISH & SPEC. NO.: QQ-P-416, TYPE II CLASS 2, CAD. PLATE.

TMC (Canada) LIMITED
OTTAWA ONTARIO

GUIDE, P.C BOARD

DRAWN: [signature]

ELEC. DES. APP.

MECH. DES. APP.: [signature]

CHECKED: RPC

FINAL APPROVAL

CU10015- Ø

FORM—127