IF IT IS FOUND DESIRABLE TO CHANGE ANY TOLERANCE OR OTHER DETAIL SPECIFIED ON THIS DRAWING NOTIFY THE PURCHASER PROMPTLY.

MAXIMUM ALLOWABLE TOLERANCES HAVE BEEN DETERMINED AND DEVIATIONS WILL BE CAUSE FOR REJECTION. REMOVE ALL BURRS AND SHARP EDGES

NOTICE TO PERSONS RECEIVING THIS DRAWING

THE TECHNICAL MATERIEL CORPORATION claims proprietary right in the material disclosed hereon. This drawing is issued in confidence for engineering information only and may not be reproduced or used to manufacture anything shown hereon without permission from THE TECHNICAL MATERIEL CORPORATION to the user. This drawing is loaned for mutual assistance and is subject to recall at any time.

Property of:
THE TECHNICAL MATERIEL CORPORATION
MAMARONECK, NEW YORK

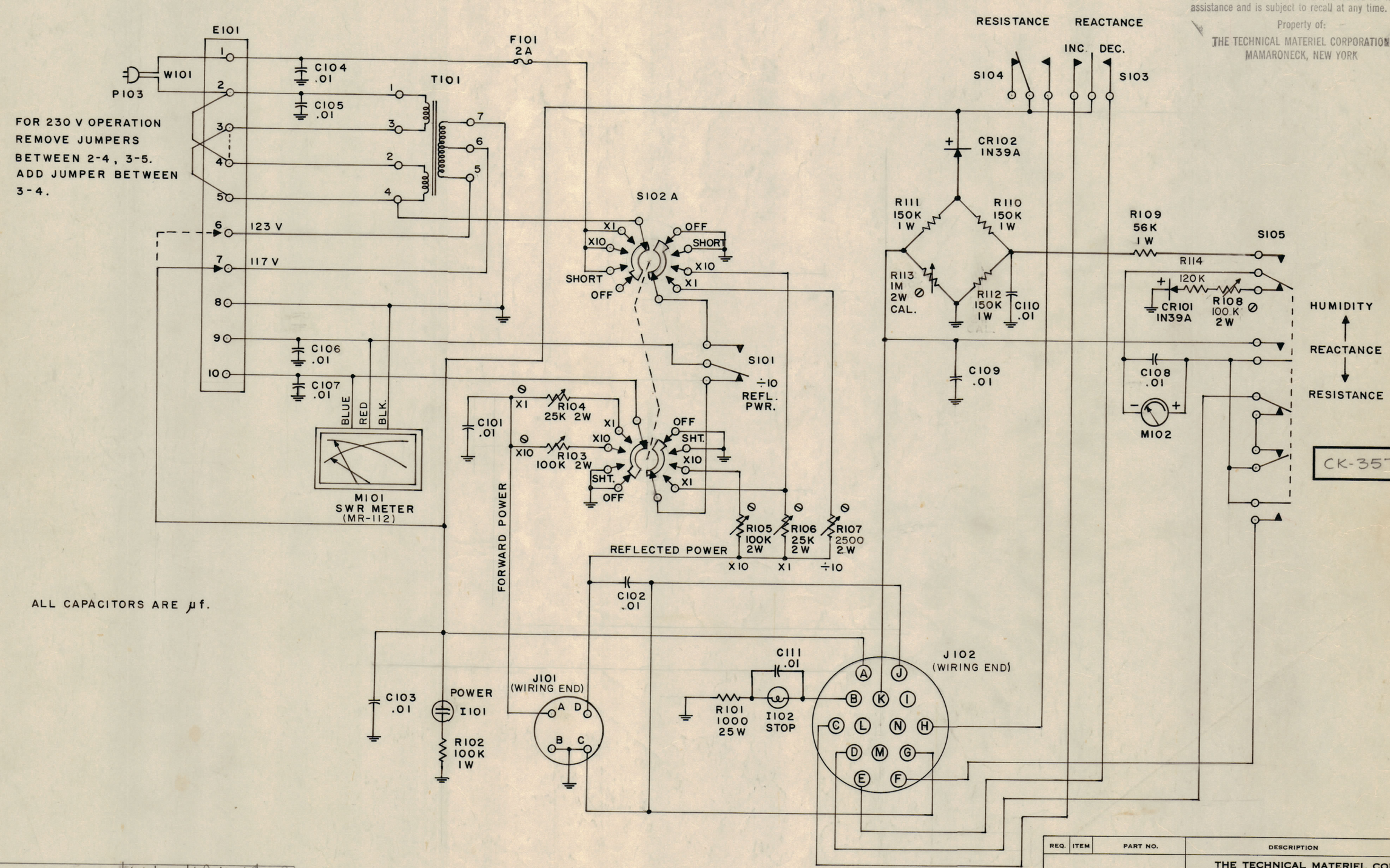


| ISSUE | ITEM | CHANGED FROM | DATE | CN. NO. | DRAFTS | CHECKER | ENG. APP. |
|---|---|---|---|---|---|---|---|
| C | 1 | C111 ADDED | 6/11/58 | 3 | | | |
| B | 2<br>1 | R114 ADDED<br>R108 WAS 250K, 1W | 5/21/58 | 2 | | | |
| A | 1 | R110 & R111 REVERSED<br>R112 & R113 REVERSED | 5/15/58 | 1 | LG | | |

TOLERANCES

ALL OTHERS: DEC. DIM. ± ; FRAC. DIM. ± ; ANGULAR DIM. ±

SCALE:

DRILL, PUNCH, COMMERCIAL STOCK SIZES AND MANUFACTURERS TOLERANCES ARE NOT INCLUDED.

| REQ. PER UNIT | MODEL | PROJECT NO. | ASS'Y. NO. | DATE |
|---|---|---|---|---|
| 1 | ATS-MCU | | | 4-9-58 |

USED ON

| REQ. | ITEM | PART NO. | DESCRIPTION | SYMBOL |
|---|---|---|---|---|

STOCK SIZE

MATERIAL | WEIGHT PER PC.

TYPE & TEMPER

HEAT TREAT. SPEC.

FINISH & SPEC. NO.

THE TECHNICAL MATERIEL CORP.
MAMARONECK, NEW YORK

SCHEMATIC DIAGRAM

CONTROL MONITOR — MODEL ATS

C.D.D. — DRAWN — ELEC. DES. APP. — MECH. DES. APP.

CHECKED — FINAL APPROVAL

CK-357 C

FORM — 110