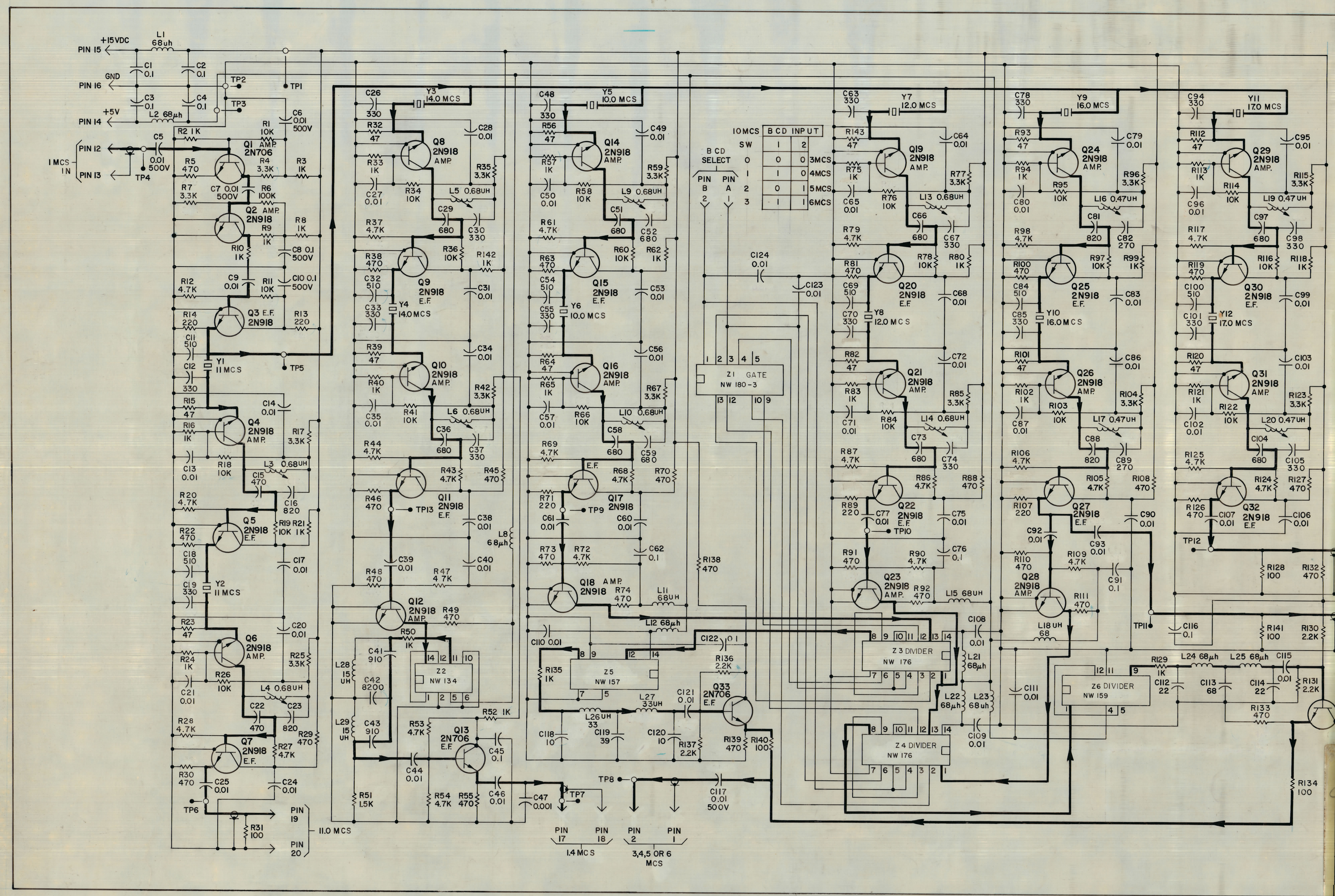


| REVISIONS | | | | | | | |
|---|---|---|---|---|---|---|---|
| ZONE | LTR | DESCRIPTION | DATE | E.M.N.NO | DRAFT | CHKD | APPD |
| | X | EXP. RELEASE | 4/7/60 | X | | | |
| | X1 | UPDATED | 2/1/63 | | KD | KD | |
| | Ø | ORIGINAL RELEASE FOR PRODUCTION | 4/4/67 | Ø | KD | KD | |
| | A | R136 WAS 22K, Z1 WAS NW 180-3, R145 WAS 2.2K, LAST SYM. REV. | 8/4/70 | 13685 | KL | | |
| | B | SIGNAL FLOW LINES | 11/6/70 | 20056 | RJ | CJ | |
| | C | REVISED | 11/13/70 | 20112 | RJ | CJ | |

| LAST SYMBOL | MISSING SYMBOL |
|---|---|
| C124 | L7 |
| Z6 | |
| L29 | |
| Q34 | |
| R143 | |
| TP13 | |
| Y11 | |

NOTE: UNLESS SPECIFIED OTHERWISE
1. ALL RESISTANCE VALUES ARE IN OHMS, 1/4 W.
2. ALL WHOLE NO. CAPACITANCE VALUES ARE PF. ALL DECIMAL CAPACITANCE VALUES ARE UF.
3. ALL INDUCTANCE VALUES ARE mH.
4. PARTIAL REFERENCE DESIGNATIONS SHOWN, FOR COMPLETE DESIGNATION PREFIX WITH UNIT NUMBER AND SUBASSEMBLY DESIGNATION AS APPLICABLE.

A4689/PC447

| QTY REQ. | ITEM | PART NO. | DESCRIPTION | SYMBOL |
|---|---|---|---|---|
| | | | LIST OF MATERIAL | |

FINAL APPROVAL — DATE 8/11/69
MECH. DES. — DATE
ELECT. DES. — DATE
CHECKED — DATE 5/28/69
DRAWN DETOR & SONS — DATE 5/12/69

THE TECHNICAL MATERIEL CORP.
MAMARONECK, NEW YORK

DIAGRAM SCHEMATIC
1 MC HARMONIC GENERATOR
HFSR-4

SIZE R | CODE IDENT NO. 82679 | DWG NO. CK 1441 | ISSUE C
SCALE NONE | SHEET | OF