ISSUE	ITEM	CHANGED FROM	DATE	CN. NO.	DRAFTS	CHECKER	ENG. APP.
Φ		PROD RELEASE	14 MAR 73		C.C.	SDW	SDW

REQ.	ITEM	PART NO.	DESCRIPTION	SYMBOL
A/R	1	MWC 22(7)U2	WIRE, ELECTRICAL	
A/R	2	PX100-9-330	SLEEVING, INSULATING, WHITE	
1	3	TE-120-2	SPADE LUG	

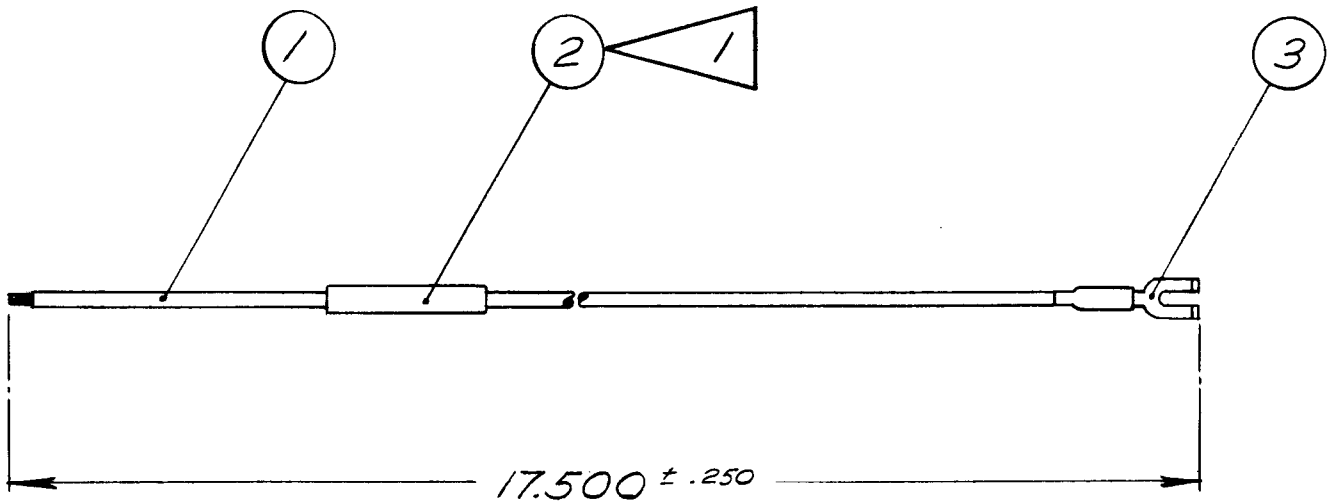

NOTES

1. TO BE MARKED WITH TMC PART NO. COMPLETE WITH LATEST REVISION LETTER

MODEL	PROJECT NO.	ASS'Y. NO.	DATE
V.M.C. 8			14 MAR 73

USED ON

MAXIMUM ALLOWABLE TOLERANCES HAVE BEEN DETERMINED AND DEVIATIONS WILL BE CAUSE FOR REJECTION. REMOVE ALL BURRS AND SHARP EDGES

IF IT IS FOUND DESIRABLE TO CHANGE ANY TOLERANCE OR OTHER DETAIL SPECIFIED ON THIS DRAWING NOTIFY THE PURCHASER PROMPTLY.

TOLERANCES

ALL OTHERS	DEC. DIM. ±	.X = .05
	FRAC. DIM. ± 1/64	.XX = .01
	ANGULAR DIM. ± 0° 30'	.XXX = .005

SCALE N.T.S.

DIMENSIONS IN INCHES UNLESS OTHERWISE SPECIFIED

DRILL, PUNCH, COMMERCIAL STOCK SIZES AND MANUFACTURERS TOLERANCES ARE NOT INCLUDED.

STOCK SIZE

MATERIAL | WEIGHT PER PC.

TYPE & TEMPER

HEAT TREAT. SPEC.

FINISH & SPEC. NO.

TMC (Canada) LIMITED
OTTAWA ONTARIO

CABLE, RF

DRAWN	ELEC. DES. APP	MECH. DES. APP.
C. CHARLES		

CHECKED	FINAL APPROVAL
	S. WITTEN

CA 10638 Φ

FORM—127