UNIT	MODEL		DATE	AX-219	C
2	GPT-40K	[redacted]	2/26/60		

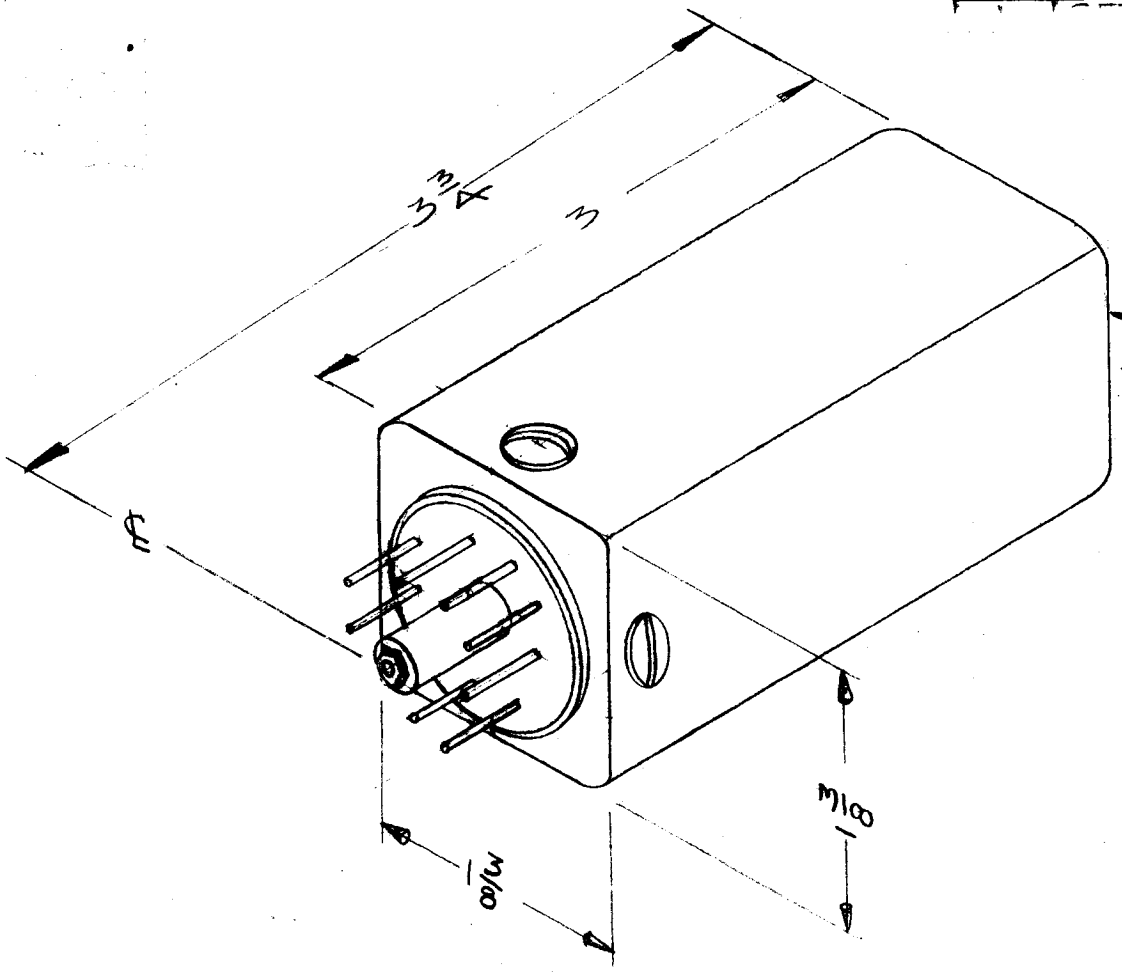

FREQ. RANGE - 4 - 28 mc
INPUT - 55 VOLTS R.F. (Pin 1)
200 UA MAX.

OUT PUT - 3 VDC (Pin 3)

OCTAL BASE

MARK TMC P/N AX-219-
1/8 HIGH BLACK GOTHIC,
WITH LATEST REV. LETTER,
AS PER TMC SPECS. S-727,
ON TOP OF CAN.

ISSUE	ITEM	CHANGED FROM	DATE	CH. NO.	DRAFTS	CHECKER	ENG. APP.
C	1	P/N STAMP RELOCATED	9.1.64	12277	KB		
B	2	OUTPUT WAS 0.2	4-11-60	2117			
	1	INPUT WAS 200 V					
A	1	"Used on" Ref changed.	4/8/60	—	LG		LG

TOLERANCES

DEC. DIM. ±
FRAC. DIM. ±
ANGULAR DIM. ±

SCALE: 4A-2070

MAXIMUM ALLOWABLE TOLERANCES HAVE BEEN DETERMINED AND ANY DEVIATIONS WILL BE CAUSE FOR REJECTION. REMOVE ALL BURRS AND SHARP EDGES

REQ.	ITEM	PART NO.	DESCRIPTION	SYMBOL

STOCK SIZE

MATERIAL

TYPE & TEMPER | HEAT TREAT. SPEC.

FINISH & SPEC. NO.

THE TECHNICAL MATERIEL CORP.
MAMARONECK, NEW YORK

NETWORK, DETECTOR
METER CKT.

DRAWN	CHECKED	FINAL APPROVAL	
		AX-219	C
ELEC. DES. APP.	MECH. DES. APP.		

FORM 108-A

REQ. PER UNIT	USED ON MODEL	ASSY. NO.	DATE	AX-220	B
8	GPT-40K	AP-105	3/2/60		

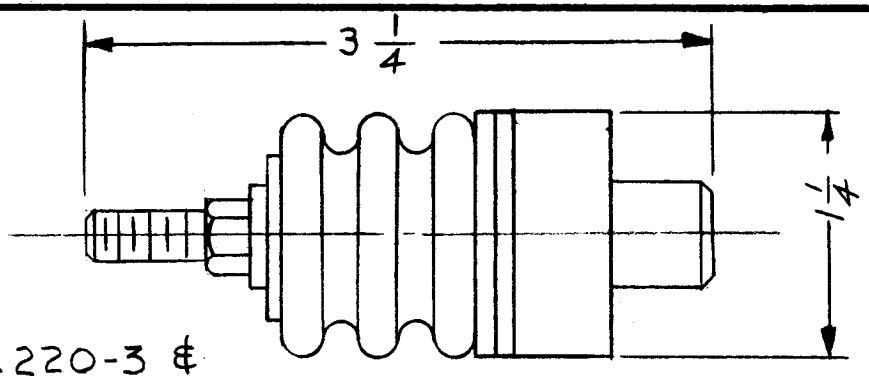

AX220-3 &
AX220-2

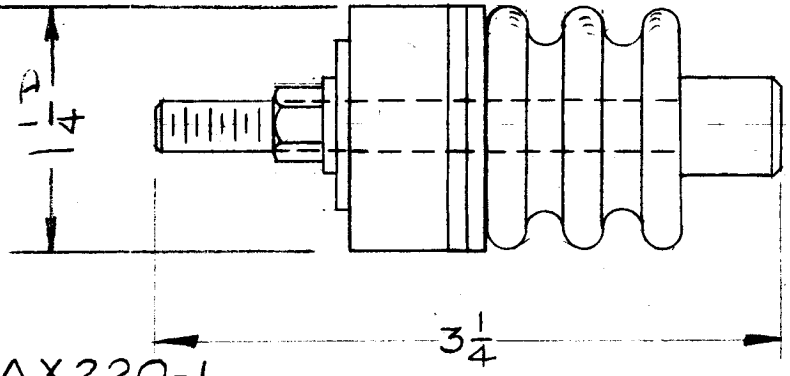

AX220-1

ASSEMBLY CONSISTS OF:
1-STUD (W/BUTTON)
1-STEATITE INSULATORS,
2-NEOPRENE GASKETS,
2-FIBER WASHERS, FLAT WASHER AND HEX NUT
1-SPACER

ISSUE	ITEM	CHANGED FROM	DATE	CH. NO.	DRAFTS	CHECKER	ENG. APP.
B		CHG'D 3-3/4 TO 3-1/4 ADD AX220-3	9-22-66	16862	RME		
A	1	AX220-2 ADDED	6/12/64	11520	A.M.		

TOLERANCES

DEC. DIM. ±
FRAC. DIM. ±
ANGULAR DIM. ±

SCALE: 1/2 = 1"

1A-1841

MAXIMUM ALLOWABLE TOLERANCES HAVE BEEN DETERMINED AND ANY DEVIATIONS WILL BE CAUSE FOR REJECTION.
REMOVE ALL BURRS AND SHARP EDGES

REQ.	ITEM	PART NO.	DESCRIPTION	SYMBOL

STOCK SIZE

MATERIAL

TYPE & TEMPER | HEAT TREAT. SPEC.

FINISH & SPEC. NO.

THE TECHNICAL MATERIEL CORP.
MAMARONECK, NEW YORK

FEED-THRU, INSULATED

DRAWN | CHECKED | FINAL APPROVAL

ELEC. DES. APP | MECH. DES. APP

AX-220 B

FORM 108-A

REQ. PER UNIT	USED ON MODEL	ASS'Y. NO.	DATE
2	GPT-40K	AT-101	3-14-60
1	GPT-40K	AP-103	

AX-221

ASSEMBLY IS BERYLLIUM COPPER NICKEL PLATED.

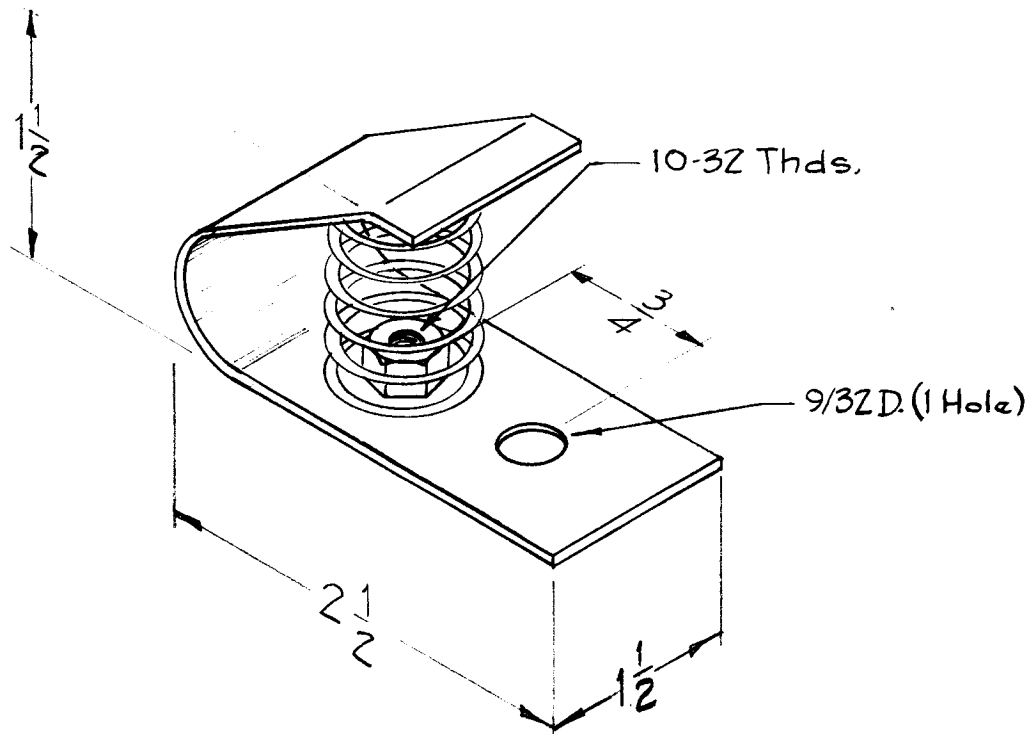

ISSUE	ITEM	CHANGED FROM	DATE	CH. NO.	DRAFTS	CHECKER	ENG. APP.

TOLERANCES

DEC. DIM. ±
FRAC. DIM. ±
ANGULAR DIM. ±

SCALE: 2A-1847

MAXIMUM ALLOWABLE TOLERANCES HAVE BEEN DETERMINED AND ANY DEVIATIONS WILL BE CAUSE FOR REJECTION. REMOVE ALL BURRS AND SHARP EDGES

REQ.	ITEM	PART NO.	DESCRIPTION	SYMBOL

STOCK SIZE

MATERIAL

TYPE & TEMPER | HEAT TREAT. SPEC.

FINISH & SPEC. NO.

THE TECHNICAL MATERIEL CORP.
MAMARONECK, NEW YORK

CONTACT, SPRING 1-1/2

DRAWN	CHECKED	FINAL APPR VAL

ELEC. DES. APP | MECH. DES. APP

AX-221

FORM 108-A

REQ. PER UNIT	USED ON			AX-222	A
	M DEL	ASS'Y. NO.	DATE		
1	GPT-40K	AT-101	4-11-60		

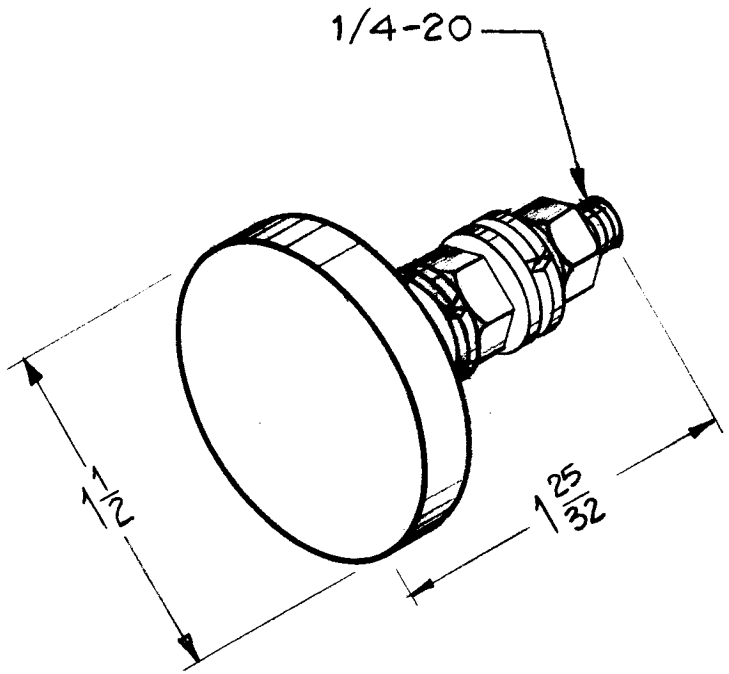

ASS'Y. CONSISTS OF
(1) CONTACT, BRASS, RHODIUM PLATE
(2) FLAT WASHERS BRASS, NICKEL PLATE
(2) SPLIT LOCKWASHER BRONZE, NICKEL PLATE
(2) NUT, HEX, BRASS, NICKEL PLATE

ISSUE	ITEM	CHANGED FROM	DATE	CH. NO.	DRAFTS	CHECKER	ENG. APP.
A	1	Split Lockw. 2 Req Was Internal 1 Req	10-31-61	5788	L L	[illegible]	[illegible]

REQ.	ITEM	PART NO.	DESCRIPTION	SYMBOL

STOCK SIZE

MATERIAL

TYPE & TEMPER | HEAT TREAT. SPEC.

FINISH & SPEC. NO.

THE TECHNICAL MATERIEL CORP.
MAMARONECK, NEW YORK

BUTTON, CONTACT
PA INPUT

DRAWN	CHECKED	FINAL APPROVAL
[illegible]	[illegible]	[illegible]
ELEC. DES. APP	MECH. DES. APP	AX-222 A

TOLERANCES

DEC. DIM. ±
FRAC. DIM. ±
ANGULAR DIM. ±

SCALE:

1A-1862

MAXIMUM ALLOWABLE TOLERANCES HAVE BEEN DETERMINED AND ANY DEVIATIONS WILL BE CAUSE FOR REJECTION. REMOVE ALL BURRS AND SHARP EDGES

FORM 108-A

REQ. PER UNIT	USED ON MODEL	ASS'Y. NO.	DATE	AX-223	A
2	40K AD-103		4-11-60		

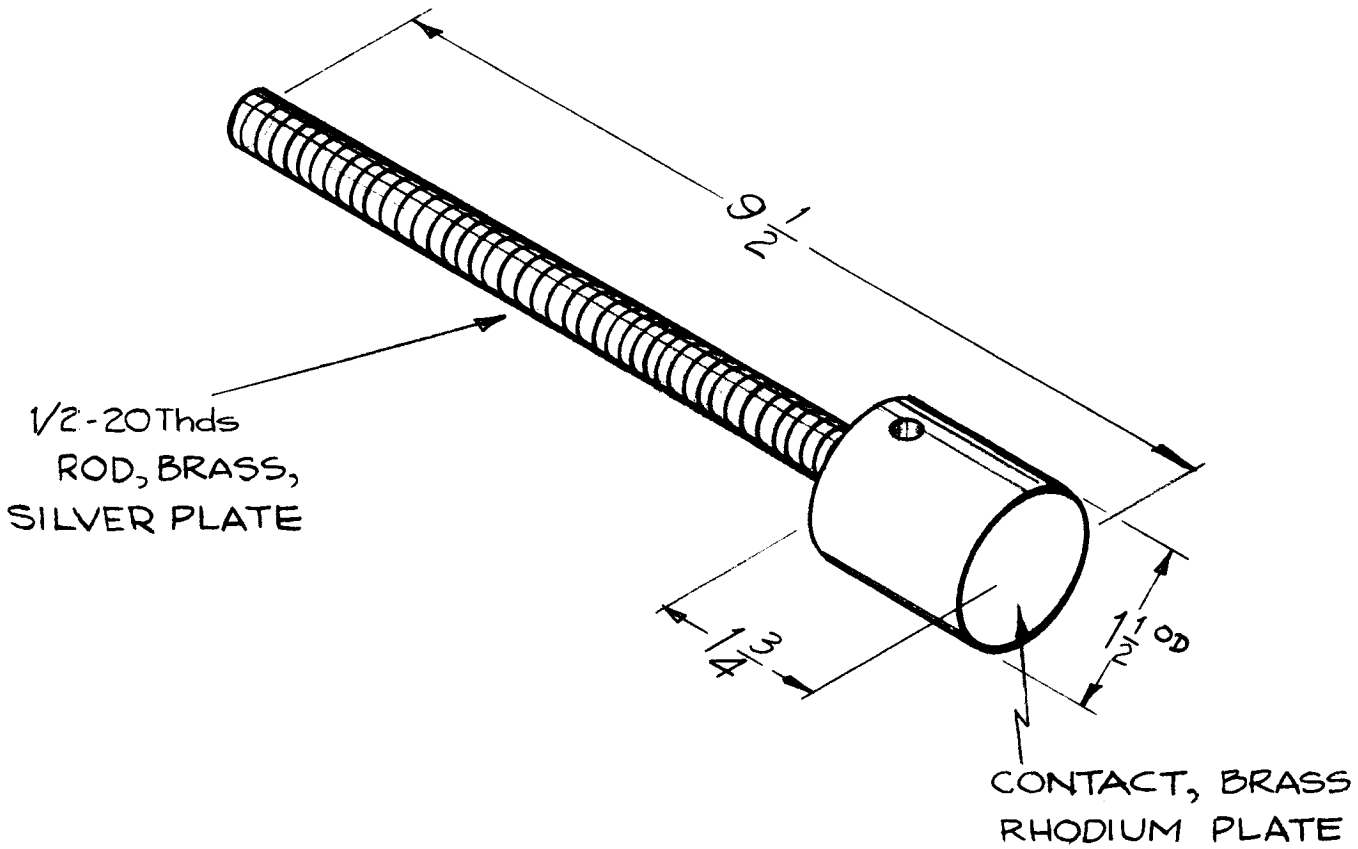

ISSUE	ITEM	CHANGED FROM	DATE	CH. NO.	DRAFTS	CHECKER	ENG. APP.
A	1	ROD WAS GOLD PLATE	11-14-63	10358		MAT	

REQ.	ITEM	PART NO.	DESCRIPTION	SYMBOL

THE TECHNICAL MATERIEL CORP.
MAMARONECK, NEW YORK

CONTACT ASS'Y., BAL. OUTPUT

STOCK SIZE

MATERIAL

TYPE & TEMPER | HEAT TREAT. SPEC.

FINISH & SPEC. NO.

TOLERANCES

SCALE:

1A-1863

DEC. DIM. ±
FRAC. DIM. ±
ANGULAR DIM. ±

MAXIMUM ALLOWABLE TOLERANCES HAVE BEEN DETERMINED AND ANY DEVIATIONS WILL BE CAUSE FOR REJECTION. REMOVE ALL BURRS AND SHARP EDGES

DRAWN	CHECKED	FINAL APPROVAL

ELEC. DES. APP | MECH. DES. APP

AX-223 A

FORM 100-A

REQ. PER UNIT	USED ON MODEL	ASS'Y. NO.	DATE	AX-228
6	GPT-40K	AP-105	6-15-60	

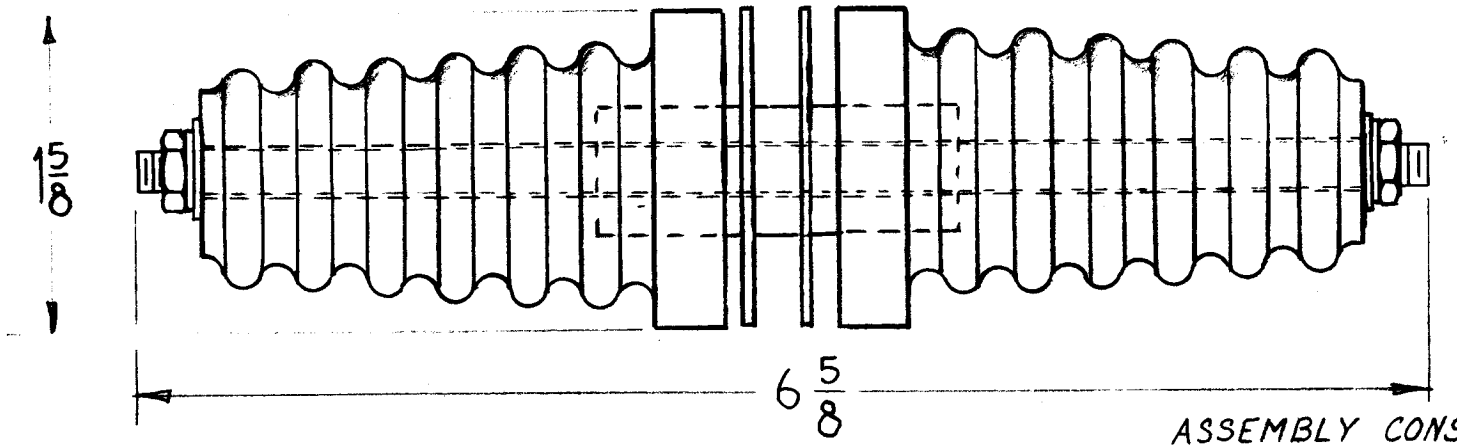

ASSEMBLY CONSISTS OF:
2 EACH RIBBED STEATITE INSULATORS
2 EACH SILICONE GASKETS
2 EACH NO. 10 FLAT WASHERS
2 EACH NO. 10 FIBER WASHERS
2 EACH NO. 10-32 HEX. NUTS
1 EACH TEFLON GLAND
1 EACH 10-32 THREADED STUD
1 EACH TEFLON STUD INSULATOR
MOUNTING-ONE 3/4 D. HOLE

ISSUE	ITEM	CHANGED FROM	DATE	CH. NO.	DRAFTS	CHECKER	ENG. APP.

TOLERANCES
DEC. DIM. ±
FRAC. DIM. ±
ANGULAR DIM. ±

SCALE: 2A-1912

MAXIMUM ALLOWABLE TOLERANCES HAVE BEEN DETERMINED AND ANY DEVIATIONS WILL BE CAUSE FOR REJECTION.
REMOVE ALL BURRS AND SHARP EDGES

REQ.	ITEM	PART NO.	DESCRIPTION	SYMBOL

STOCK SIZE

MATERIAL

TYPE & TEMPER | HEAT TREAT. SPEC.

FINISH & SPEC. NO.

THE TECHNICAL MATERIEL CORP.
MAMARONECK, NEW YORK

INSULATOR, FEEDTHRU
PLATE RECTIFIER

DRAWN | CHECKED | FINAL APPROVAL

ELEC. DES. APP | MECH. DES. APP

AX-228

FORM 108-A

REQ. PER UNIT	USED ON MODEL	ASS'Y. NO.	DATE
10	ACU		10-18-60
5	GPT-40K		4-15-61

AX-233 A

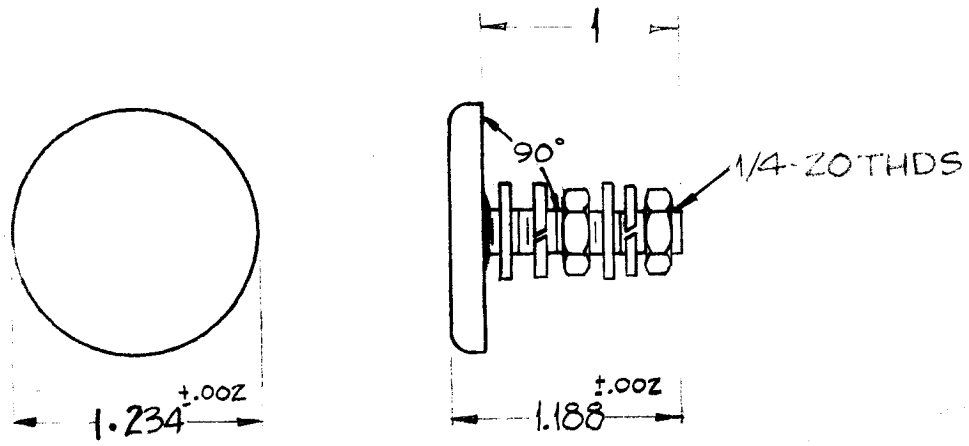

ASS'Y CONSISTS OF
(1) CONTACT, SWITCH
(2) FW25HBN - Flatwasher
(2) LWS25MRN - Lockwasher (SPLIT)
(2) NTH2520BN14 - Hex Nut

MATERIAL
CONTACT - BRASS, RHODIUM PLATED
HARDWARE - BRASS, NICKEL PLATED

ISSUE	ITEM	CHANGED FROM	DATE	CH. NO.	DRAFTS	CHECKER	ENG. APP.
A	1	FW25HBN, LWS25MRN NTH2520BN14, QUAN WAS 1	10-31-61	5789	EL	RH	LG

TOLERANCES
DEC. DIM. ±
FRAC. DIM. ±
ANGULAR DIM. ±

SCALE: 1A-1986

MAXIMUM ALLOWABLE TOLERANCES HAVE BEEN DETERMINED AND ANY DEVIATIONS WILL BE CAUSE FOR REJECTION.
REMOVE ALL BURRS AND SHARP EDGES

REQ.	ITEM	PART NO.	DESCRIPTION	SYMBOL

STOCK SIZE

MATERIAL

TYPE & TEMPER | HEAT TREAT. SPEC.

FINISH & SPEC. NO.

THE TECHNICAL MATERIEL CORP.
MAMARONECK, NEW YORK

CONTACT, ROTARY SWITCH

DRAWN | CHECKED | FINAL APPROVAL

ELEC. DES. APP | MECH. DES. APP

AX-233 A

FORM 108-A

REQ. PER UNIT	USED ON MODEL	ASS'Y. NO.	DATE
5	ACU		10-18-60
5	GPT-401K		4-15-61

AX-234

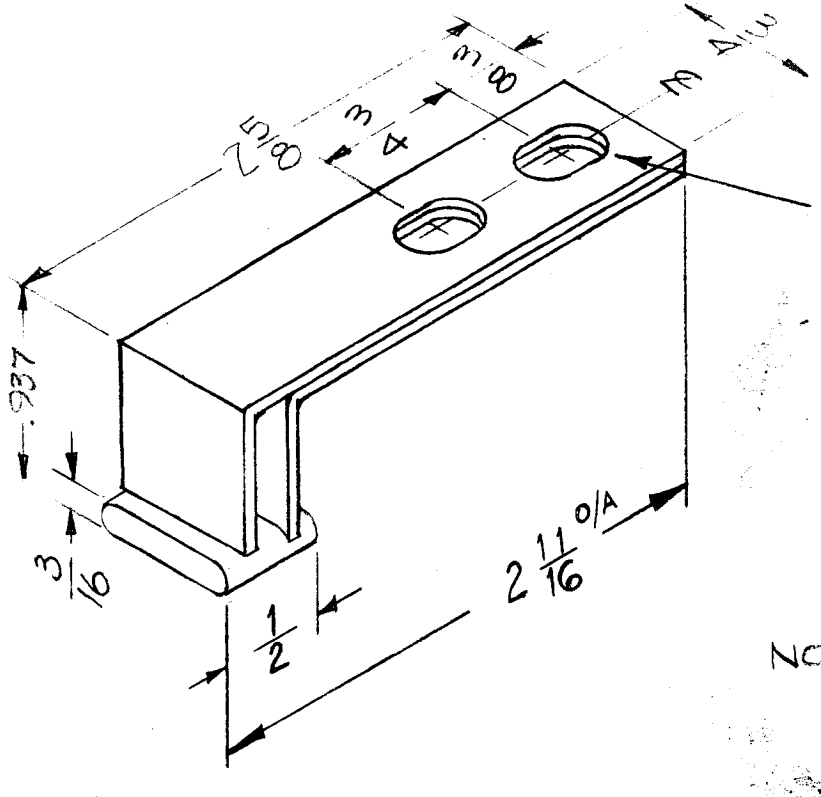

ASS'Y CONSIST OF
(1) LEAF, CONTACT

(1) SHOE CONTACT ASS'Y.

$\frac{11}{64} \times \frac{11}{32}$ SLOTS
2 REQ

MATERIAL
LEAFS - Berryllium Copper
SHOE - Brass

FINISH
RHODIUM PLATE

NOTE - ASS'Y IS WIRED TOGETHER AS SET FOR SHIPPING.

ISSUE	ITEM	CHANGED FROM	DATE	CH. NO.	DRAFTS	CHECKER	ENG. APP.

TOLERANCES
DEC. DIM. ±
FRAC. DIM. ±
ANGULAR DIM. ±

SCALE: A-1987

MAXIMUM ALLOWABLE TOLERANCES HAVE BEEN DETERMINED AND ANY DEVIATIONS WILL BE CAUSE FOR REJECTION.
REMOVE ALL BURRS AND SHARP EDGES

REQ.	ITEM	PART NO.	DESCRIPTION	SYMBOL

STOCK SIZE

MATERIAL

TYPE & TEMPER | HEAT TREAT. SPEC.

FINISH & SPEC. NO.

THE TECHNICAL MATERIEL CORP.
MAMARONECK, NEW YORK

CONTACT ASSY, ROTOR

DRAWN	CHECKED	FINAL APPROVAL
D.O.M.		
ELEC. DES. APP	MECH. DES. APP	AX-234

FORM 108-A

REQ. PER UNIT	USED ON MODEL	ASS'Y. NO.	DATE	AX-237
1	ACU		10-20-60	

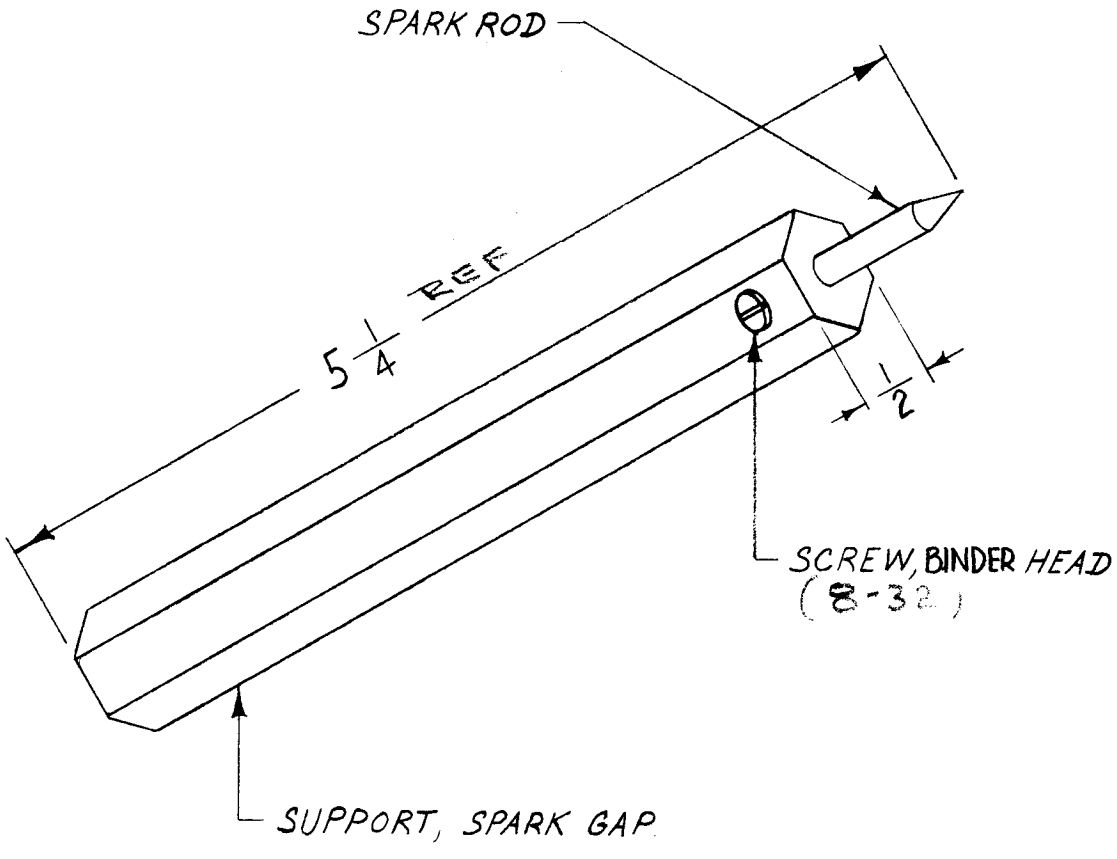

ASS'Y. CONSISTS OF (1) SUPPORT SPARK GAP (1) SPARK ROD (1) BINDER HEAD SCREW.

MATERIALS

SUPPORT SPARK GAP ~ ALUMINUM, S404 YELL. IRIDITE

SPARK ROD ~ BRASS, S105 CADMIUM PLATE.

SCREW, BINDERHEAD ~ BRASS, BRIGHT NICKEL.

ISSUE	ITEM	CHANGED FROM	DATE	CH. NO.	DRAFTS	CHECKER	ENG. APP.

TOLERANCES

DEC. DIM. ±
FRAC. DIM. ± 1/64
ANGULAR DIM. ±

SCALE: 1A-2001

MAXIMUM ALLOWABLE TOLERANCES HAVE BEEN DETERMINED AND ANY DEVIATIONS WILL BE CAUSE FOR REJECTION. REMOVE ALL BURRS AND SHARP EDGES

REQ.	ITEM	PART NO.	DESCRIPTION	SYMBC

STOCK SIZE

MATERIAL

TYPE & TEMPER | HEAT TREAT. SPEC.

FINISH & SPEC. NO.

THE TECHNICAL MATERIEL CORP.
MAMARONECK, NEW YORK

SPARK GAP ASS'Y.

DRAWN	CHECKED	FINAL APPROVAL
		AX-237
ELEC. DES. APP	MECH. DES. APP	

FORM 108-A

REQ. PER UNIT	USED ON MODEL	ASS'Y. NO.	DATE
1	RFD-1		12-1-60
1	RFC-1		12-1-60

AX-241

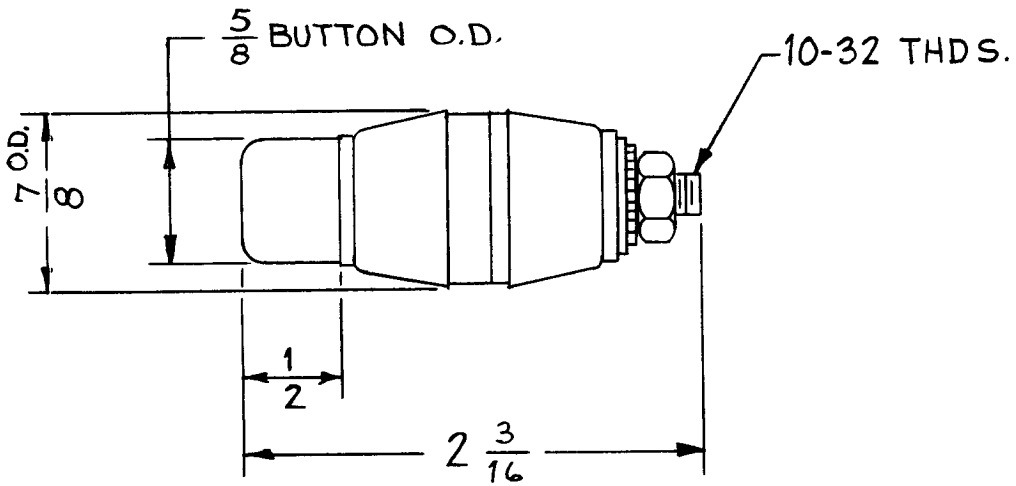

CONSISTS OF:

1 BUTTON - BRASS, NICKEL PLATED W/10-32 THREADED ROD

2 INSULATORS - CERAMIC

1 GLAND - TEFLON

1 WASHER - NEOPRENE

2 WASHER - FIBER

1 WASHER - FLAT, BRASS, NICKEL PLATED

1 WASHER - EXT. LOCK, BRASS, NICKEL PLATED

1 NUT - HEX, BRASS, NICKEL PLATED

SYM	DESCRIPTION	DATE	CH. NO.	DRAFTS	CHECKER	ENG. APP.

UNLESS OTHERWISE SPECIFIED
DIMENSIONS ARE IN INCHES AND INCLUDE CHEMICALLY APPLIED OR PLATED FINISHES

SCALE

TOLERANCES
DECIMALS .X ± .05, .XX ± .01, .XXX ± .005
FRACTIONS ± 1/64
ANGLES ± 0° 30′

CODE 1A-2026

REQ.	ITEM	PART NO.	DESCRIPTION	SYMBOL

STOCK SIZE

MATERIAL

TYPE & TEMPER | HEAT TREAT. SPEC.

FINISH & SPEC. NO.

THE TECHNICAL MATERIEL CORP.
MAMARONECK. NEW YORK

CONTACT ELECTRICAL

DRAWN | CHECKED | FINAL APPROVAL

ELEC. DES. APP. | MECH. DES. APP.

AX-241

TMC FORM 108-A

REPROVEL NO. 440H 16106

REQ. PER UNIT	USED ON MODEL	ASS'Y. NO.	DATE
1	40K	AT-101	5-2-61
1	40K	AT-102	5-2-61

AX-257 A

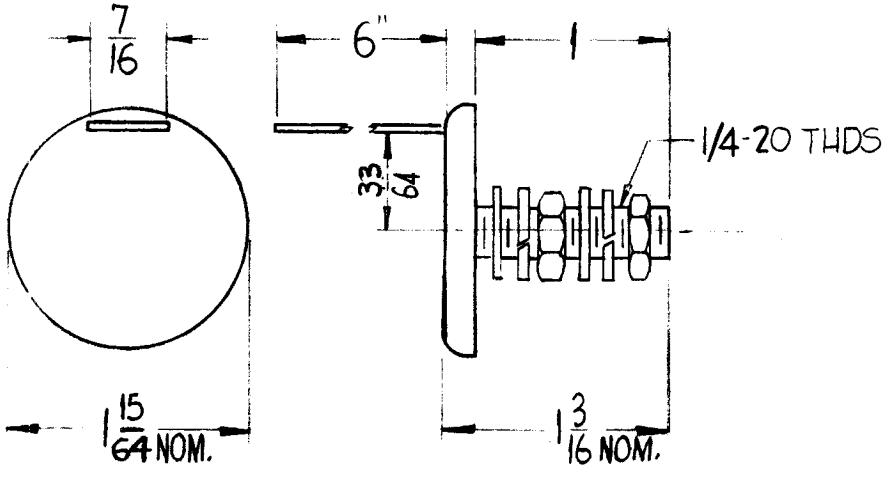

ASS'Y CONSISTS OF:

(1) CONTACT, SWITCH
(2) FW25HBN, Flatwasher
(2) LWS25MRN, Lockwasher (SPLIT)
(2) NTH2520BN14, Hex. Nut

MATERIAL

CONTACT - Brass, Rhodium Plated
STRAP - Copper, Rhodium Plated
HARDWARE - Brass, Nickel Plated

NOTICE TO PERSONS RECEIVING THIS DRAWING

THE TECHNICAL MATERIEL CORPORATION claims proprietary right in the material disclosed hereon. This drawing is issued in confidence for engineering information only and may not be reproduced or used to manufacture anything shown hereon without permission from THE TECHNICAL MATERIEL CORPORATION to the user. This drawing is loaned for mutual assistance and is subject to recall at any time.

Property of:

THE TECHNICAL MATERIEL CORPORATION
MAMARONECK, NEW YORK

ISSUE	ITEM	CHANGED FROM	DATE	CH. NO.	DRAFTS	CHECKER	ENG. APP.
A	1	FW25HBN, LWS25MRN, NTH2520BN14, 1 was Req.	10-31-61	5789	LL	RU	LG

TOLERANCES

DEC. DIM. ±
FRAC. DIM. ±
ANGULAR DIM. ±

SCALE: 1A-2098

MAXIMUM ALLOWABLE TOLERANCES HAVE BEEN DETERMINED AND ANY DEVIATIONS WILL BE CAUSE FOR REJECTION.
REMOVE ALL BURRS AND SHARP EDGES

REQ.	ITEM	PART NO.	DESCRIPTION	SYMBOL

STOCK SIZE

MATERIAL

TYPE & TEMPER | HEAT TREAT. SPEC.

FINISH & SPEC. NO.

THE TECHNICAL MATERIEL CORP.
MAMARONECK, NEW YORK

CONTACT, ELECTRICAL SWITCH

DRAWN | CHECKED | FINAL APPROVAL

ELEC. DES. APP | MECH. DES. APP

AX-257 A

FORM 108-A

REQ. PER UNIT	USED ON MODEL	ASS'Y. NO.	DATE	AX-261
3	AX-186		6-23-61	

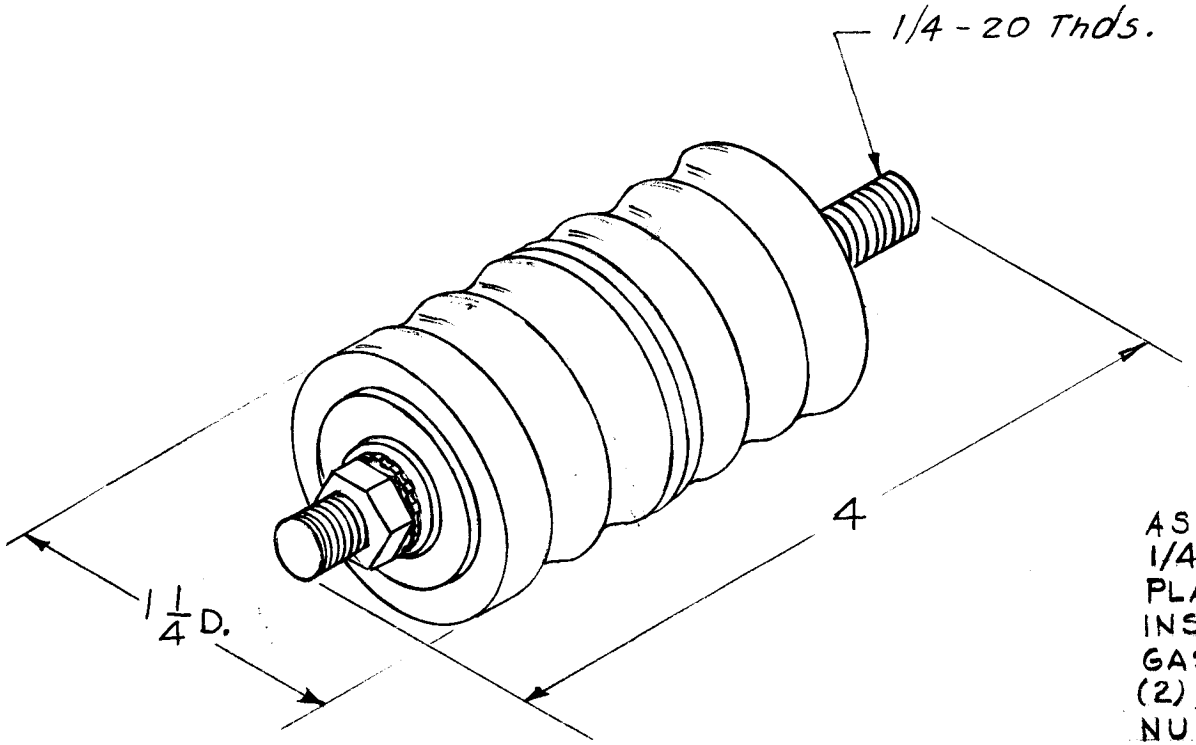

ASSEMBLY CONSISTS OF 1/4-20 Thd. BRASS, NICKEL PLATED ROD WITH STEATITE INSULATORS (2), NEOPRENE GASKETS (2), FIBER WASHERS (2), FLAT WASHERS (2), HEX. NUTS (2), EXT. LOCKWASHERS (2)

ISSUE	ITEM	CHANGED FROM	DATE	CH. NO.	DRAFTS	CHECKER	ENG. APP.

TOLERANCES

DEC. DIM. ±
FRAC. DIM. ±
ANGULAR DIM. ±

SCALE: 1A-3024

MAXIMUM ALLOWABLE TOLERANCES HAVE BEEN DETERMINED AND ANY DEVIATIONS WILL BE CAUSE FOR REJECTION.
REMOVE ALL BURRS AND SHARP EDGES

REQ.	ITEM	PART NO.	DESCRIPTION	SYMBOL

STOCK SIZE

MATERIAL

TYPE & TEMPER | HEAT TREAT. SPEC.

FINISH & SPEC. NO.

THE TECHNICAL MATERIEL CORP.
MAMARONECK, NEW YORK

FEEDTHRU . INSULATED

DRAWN	CHECKED	FINAL APPROVAL
		AX-261

ELEC. DES. APP. | MECH. DES. APP.

FORM 108-A

REQ. PER UNIT	USED ON MODEL	ASS'Y. NO.	DATE	AX-262
1	GPT-10K			

THIS DOCUMENT HAS BEEN PURCHASED BY THE GOVERMENT AND MAY BE REPRODUCED AND USED IN CONNECTION WITH ANY GOVERNMENT PROCUREMENT OR MAINTENANCE OPERATION.

82679

Not For Producti n

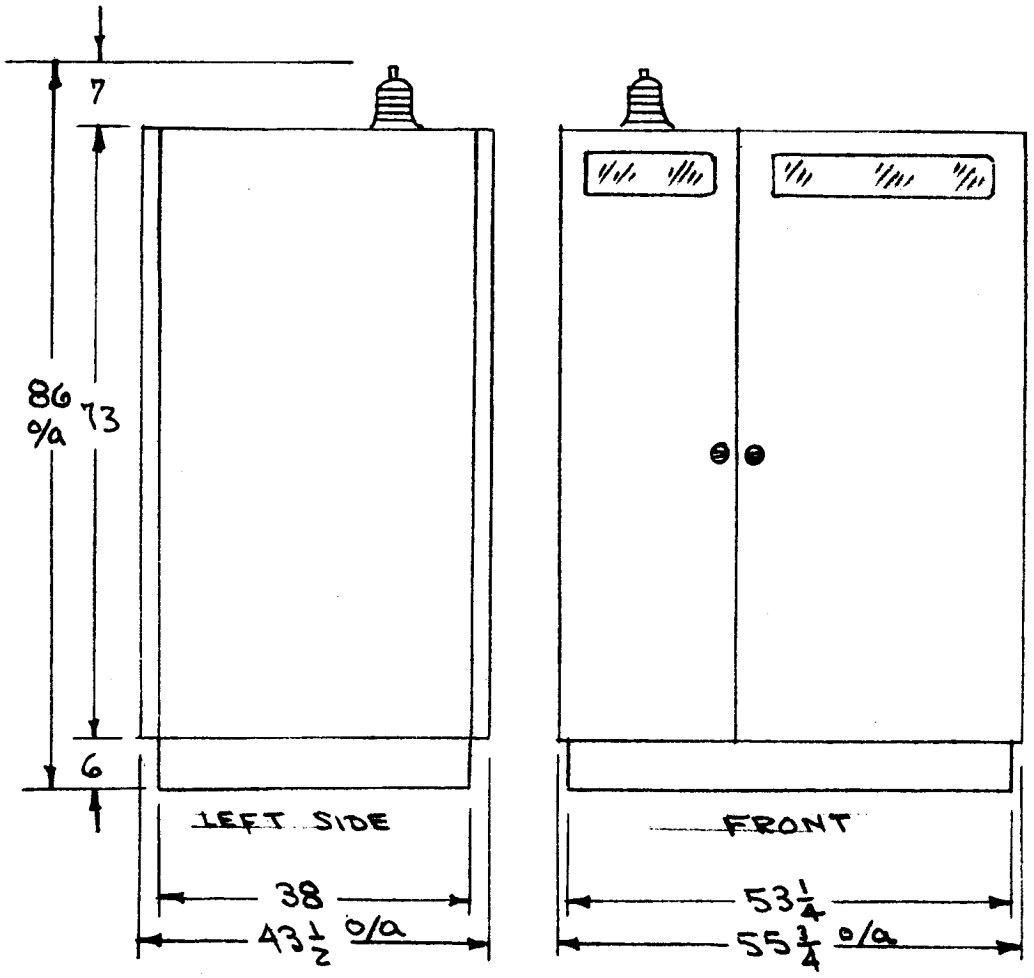

ALL DIMENSIONS ARE IN INCHES

ISSUE	ITEM	CHANGED FROM	DATE	CH. NO.	DRAFTS	CHECKER	ENG. APP.

REQ.	ITEM	PART NO.	DESCRIPTION	SYMBOL

STOCK SIZE

MATERIAL

TYPE & TEMPER | HEAT TREAT. SPEC.

FINISH & SPEC. NO.

THE TECHNICAL MATERIEL CORP.
MAMARONECK. NEW YORK

DIMENSIONAL OUTLINE DRAWING
THE MODEL GPT-10K

DRAWN	CHECKED	FINAL APPROVAL
	THD	

ELEC. DES. APP. | MECH. DES. APP.

AX-262

TOLERANCES

DEC. DIM. ±
FRAC. DIM. ±
ANGULAR DIM. ±

SCALE:

MAXIMUM ALLOWABLE TOLERANCES HAVE BEEN DETERMINED AND ANY DEVIATIONS WILL BE CAUSE FOR REJECTION.
REMOVE ALL BURRS AND SHARP EDGES

FORM-108-A

REQ. PER UNIT	USED ON MODEL	ASS'Y. NO.	DATE	AX-270
5	AT-101	GPT-40K	7-15-61	

LEAF - BERYLLIUM COPPER
SHOE - BRASS

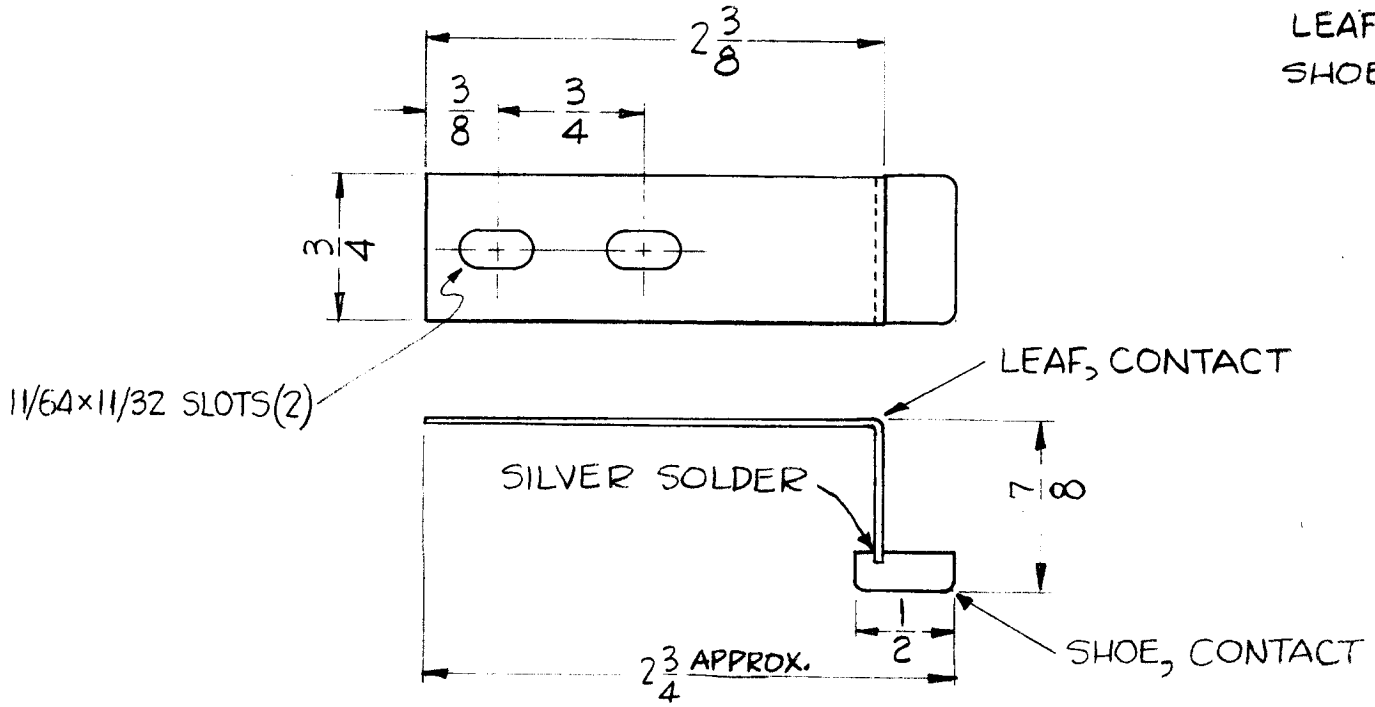

NOTICE TO PERSONS RECEIVING THIS DRAWING

THE TECHNICAL MATERIEL CORPORATION claims proprietary right in the material disclosed hereon. This drawing is issued in confidence for engineering information only and may not be reproduced or used to manufacture anything shown hereon without permission from THE TECHNICAL MATERIEL CORPORATION to the user. This drawing is loaned for mutual assistance and is subject to recall at any time.

Property of:
THE TECHNICAL MATERIEL CORPORATION
MAMARONECK, NEW YORK

ISSUE	ITEM	CHANGED FROM	DATE	CH. NO.	DRAFTS	CHECKER	ENG. APP.

TOLERANCES
DEC. DIM. ±
FRAC. DIM. ±
ANGULAR DIM. ±

SCALE: 1A-1819

MAXIMUM ALLOWABLE TOLERANCES HAVE BEEN DETERMINED AND ANY DEVIATIONS WILL BE CAUSE FOR REJECTION.
REMOVE ALL BURRS AND SHARP EDGES

REQ.	ITEM	PART NO.	DESCRIPTION	SYMBOL

STOCK SIZE

MATERIAL

TYPE & TEMPER | HEAT TREAT. SPEC.

FINISH & SPEC. NO.

THE TECHNICAL MATERIEL CORP.
MAMARONECK, NEW YORK

ASSEMBLY, SHOE CONTACT

DRAWN | CHECKED | FINAL APPROVAL

ELEC. DES. APP | MECH. DES. APP

AX-270

FORM 108-A

THE CONTENTS OF THIS DRAWING ARE THE EXCLUSIVE PROPERTY OF THE TECHNICAL MATERIEL CORP. ITS UNAUTHORIZED USE OR REPRODUCTION IN WHOLE OR IN PART IS STRICTLY FORBIDDEN.

REQ. PER UNIT	USED ON MODEL	ASS'Y. NO.	DATE	
1	ES TO TCA	A-2211	10-11-61	AX-298

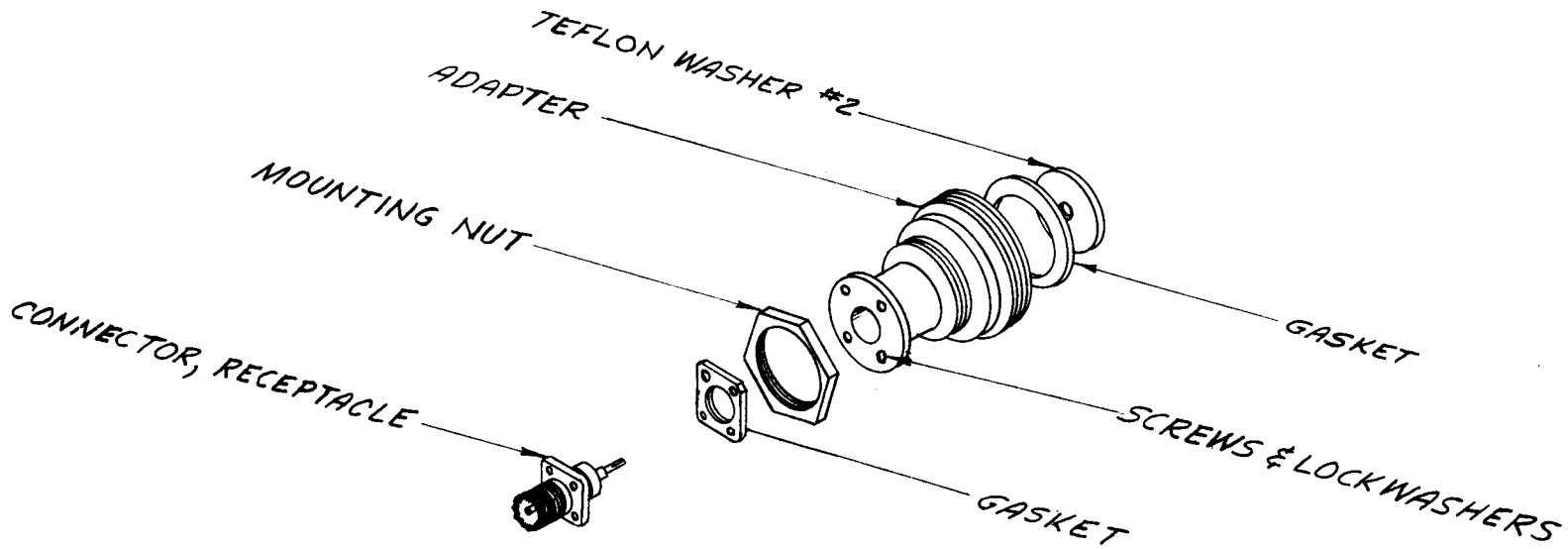

SYM	DESCRIPTION	DATE	CH. NO.	DRAFTS	CHECKER	ENG. APP.

UNLESS OTHERWISE SPECIFIED:
DIMENSIONS ARE IN INCHES
TOLERANCES ON
FRAC. ± 1/64 DEC. ± .005 ANGLES ± 1/2°

SCALE: ~ 1A-2211

MAXIMUM ALLOWABLE TOLERANCES HAVE BEEN DETERMINED AND ANY DEVIATIONS WILL BE CAUSE FOR REJECTION. REMOVE ALL BURRS AND SHARP EDGES

REQ.	ITEM	PART NO.	DESCRIPTION	SYMBOL

STOCK SIZE

MATERIAL

TYPE & TEMPER | HEAT TREAT. SPEC.

FINISH & SPEC. NO.

THE TECHNICAL MATERIEL CORP.
MAMARONECK, NEW YORK

ADAPTOR KIT
(ES TO TCA)

DRAWN	CHECKED	FINAL APPROVAL
W.S. 10-11-61		

ELEC. DES. APP. | MECH. DES. APP.

AX-298

TMC FORM NO. 108-A

DEFIANCE NO. 1020