REQ. PER UNIT	USED ON MODEL	ASS'Y. NO.	DATE	AM-105
1	RTF-2 (PA)		5-28-59	

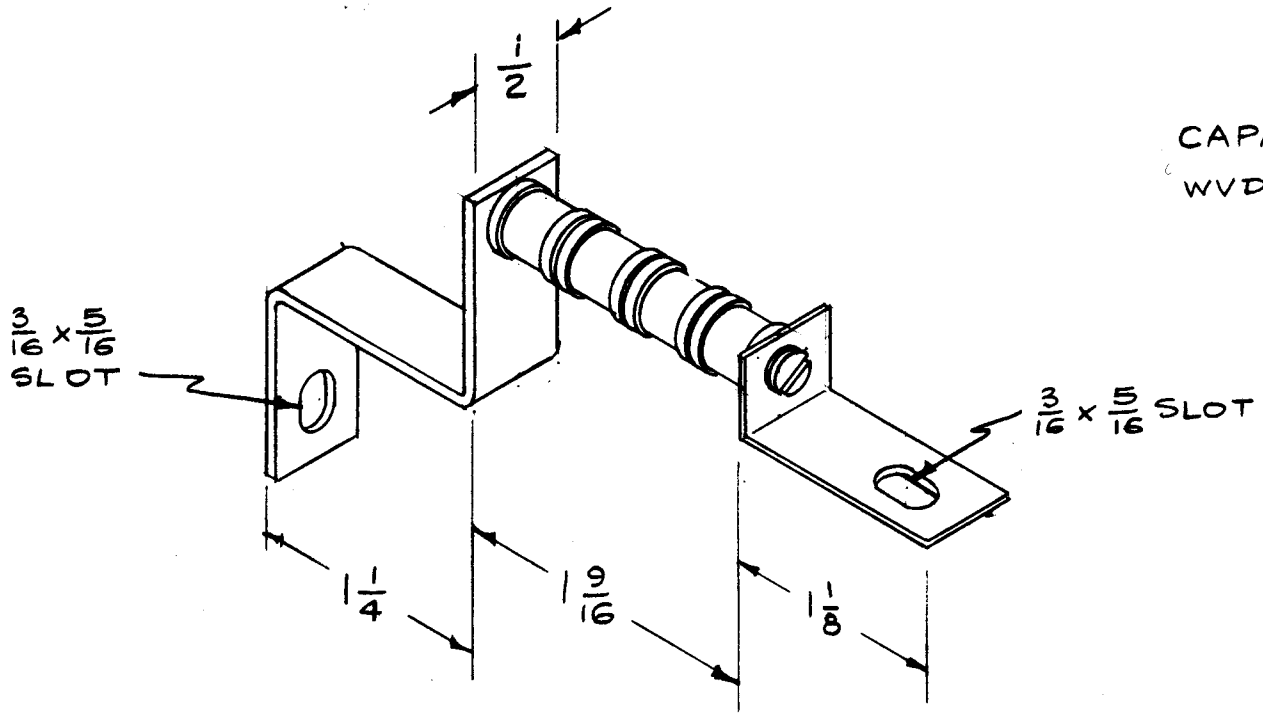

CAPACITANCE - 0.75 MMFD
WVDC - 10KVDC

ISSUE	ITEM	CHANGED FROM	DATE	CH. NO.	DRAFTS	CHECKER	ENG. APP.

REQ.	ITEM	PART NO.	DESCRIPTION	SYMBOL

STOCK SIZE

MATERIAL

TYPE & TEMPER | HEAT TREAT. SPEC.

FINISH & SPEC. NO.

THE TECHNICAL MATERIEL CORP.
MAMARONECK, NEW YORK

CAPACITOR ASS'Y., FIXED,
0.75 MMFD.

TOLERANCES	SCALE:	1A-1721
DEC. DIM. ±	MAXIMUM ALLOWABLE TOLERANCES HAVE BEEN DETERMINED AND ANY DEVIATIONS WILL BE CAUSE FOR REJECTION. REMOVE ALL BURRS AND SHARP EDGES	
FRAC. DIM. ±		
ANGULAR DIM. ±		

DRAWN	CHECKED	FINAL APPROVAL
5/28/59		
ELEC. DES. APP	MECH. DES. APP	AM-105

FORM 108-A