RE. PER UNIT	USED ON MODEL	ASS'Y. NO.	DATE	AC185	Ø
1	VLRB-1	A 3655	4-12-65		

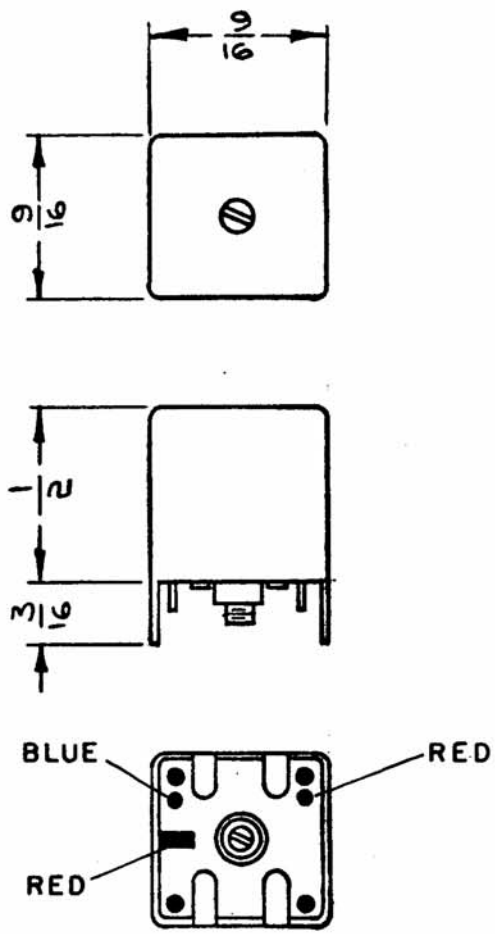

ELECTRICAL SPECS.
(WITH SLUG INSERTED)

OPERATING FREQUENCY:
INDUCTANCE @ 7.9 MC
PRIMARY: 6.24 UH ± .5 UH
SECONDARY: NOT RATED
"Q" (PRIMARY) @ 6 MC :> 50

MECHANICAL SPEC.

TURNS
PRIMARY: 27
SECONDARY: —"—
COLOR CODE: RED
CASE: COPPER CAN
CASE FINISH: TIN-PLATED
QUANTITY TERM: 4
MATERIAL:
CORE & SLUG: POWDERED IRON

SCHEMATIC

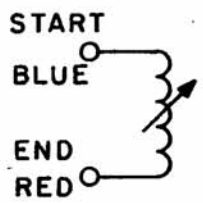

SYM	DESCRIPTION	DATE	CH. NO.	DRAFTS	CHECKER	ENG. APP.
Ø	ORIGINAL RELEASE FOR PRODUCTION	4/30/65	[illegible]	[illegible]		
X	EXPER. RELEASE	4/12/65	X	[illegible]		

UNLESS OTHERWISE SPECIFIED
DIMENSIONS ARE IN INCHES AND INCLUDE CHEMICALLY APPLIED OR PLATED FINISHES

DECIMALS .X ± .05 .XX ± .01 .XXX ± .005 — TOLERANCES — FRACTIONS ± 1/64 ANGLES ± 0° 30'

SCALE

CODE A — 2-A3901

REQ.	ITEM	PART NO.	DESCRIPTION	SYMBOL

STOCK SIZE

MATERIAL

TYPE & TEMPER — HEAT TREAT. SPEC.

FINISH & SPEC. NO.

THE TECHNICAL MATERIEL CORP.
MAMARONECK. NEW YORK

COIL, RF, ADJUSTABLE

DRAWN [illegible] — CHECKED [illegible] — FINAL APPROVAL [illegible] 5/4/65

ELEC. DES. APP. [illegible] — MECH. DES. APP.

AC185 Ø