REQ. PER UNIT	USED ON MODEL	ASS'Y. NO.	DATE	A-3232	0
1	GPT-200K(AX-395)	A-3195	10-10-63		

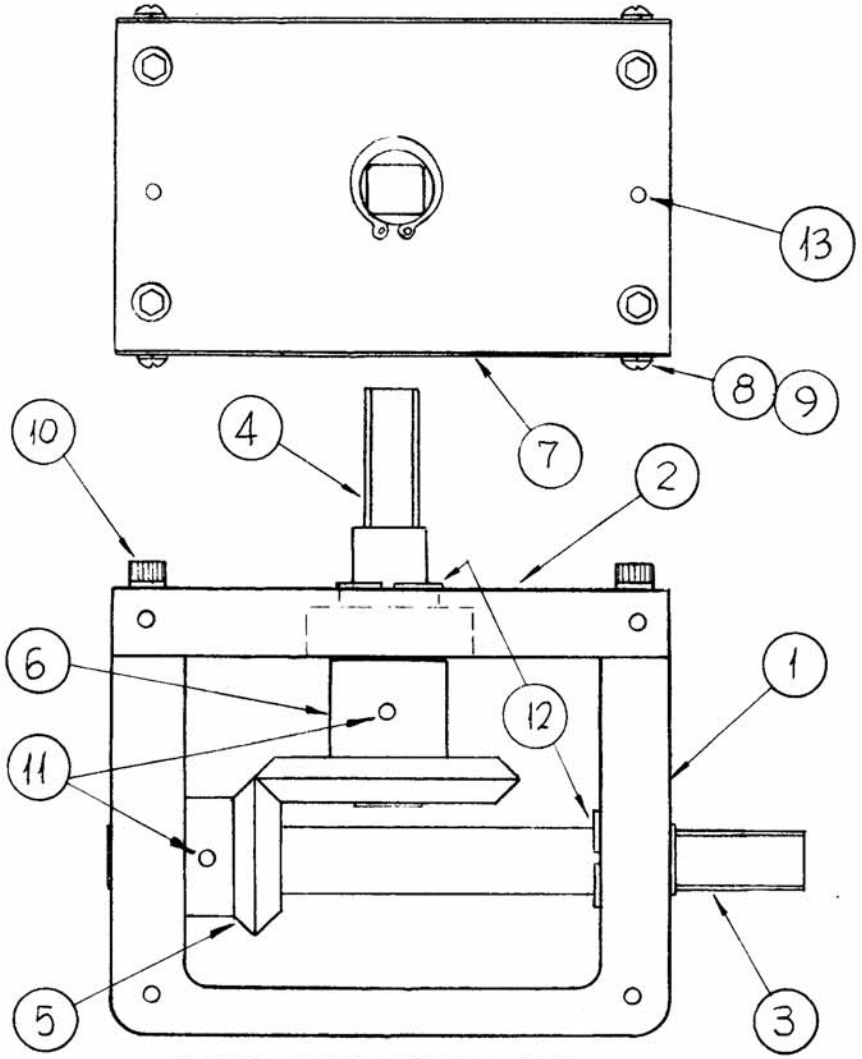

SHOWN WITH COVER OFF

REQ.	ITEM	PART NO.	DESCRIPTION	SYMBOL
2	13	PN-116-M-4-S	PIN, DOWEL	
2	12	WA-138-3	RING, RETAINING, EXTERNAL	
2	11	PN-59-094-10	PIN, SPRING	
4	10	SC-155-0832SS12	SCREW, SOCKET HEAD	
8	9	LWS04MRN	LOCKWASHER, SPLIT	
8	8	SFB0440SC3	SCREW, THREAD CUTTING P.H.	
2	7	MS-3520	PLATE, SIDES	
1	6	GR-198-1	GEAR, BEVEL	
1	5	GR-198-2	GEAR, BEVEL	
1	4	PM-966	SHAFT, SHORT	
1	3	PM-964-2	SHAFT, LONG	
1	2	PM-961	PLATE, TOP	
1	1	PM-962	BOX, RIGHT ANGLE DRIVE	

F. BUDETTI

SYM	DESCRIPTION	DATE	CH. NO.	DRAFTS	CHECKER	ENG. APP.
0	ORIGINAL RELEASE FOR PRODUCTION					

UNLESS OTHERWISE SPECIFIED
DIMENSIONS ARE IN INCHES AND INCLUDE
CHEMICALLY APPLIED OR PLATED FINISHES

SCALE 1" = 1"

DECIMALS .X ±.05 .XX ±.01 .XXX ±.005 — TOLERANCES — FRACTIONS ± 1/64 ANGLES ± 0° 30'

CODE A

STOCK SIZE

MATERIAL

TYPE & TEMPER | HEAT TREAT. SPEC.

FINISH & SPEC. NO.

THE TECHNICAL MATERIEL CORP.
MAMARONECK. NEW YORK

GEAR ASS'Y, RIGHT ANGLE DRIVE

2:1

DRAWN	CHECKED	FINAL APPROVAL
SRG	[signature]	[signature] 3-30-64

ELEC. DES. APP.	MECH. DES. APP.	A-3232	0
[signature]	[signature]		

TMC FORM 108-A

STOCK NO. 440H