THE CONTENTS OF THIS DRAWING ARE THE EXCLUSIVE PROPERTY OF THE TECHNICAL MATERIEL CORP. ITS UNAUTHORIZED USE OR REPRODUCTION IN WHOLE OR IN PART IS STRICTLY FORBIDDEN.

REQ. PER UNIT	USED ON MODEL	ASS'Y. NO.	DATE	AC 165	A
5	HFR-1/T		6-11-62		

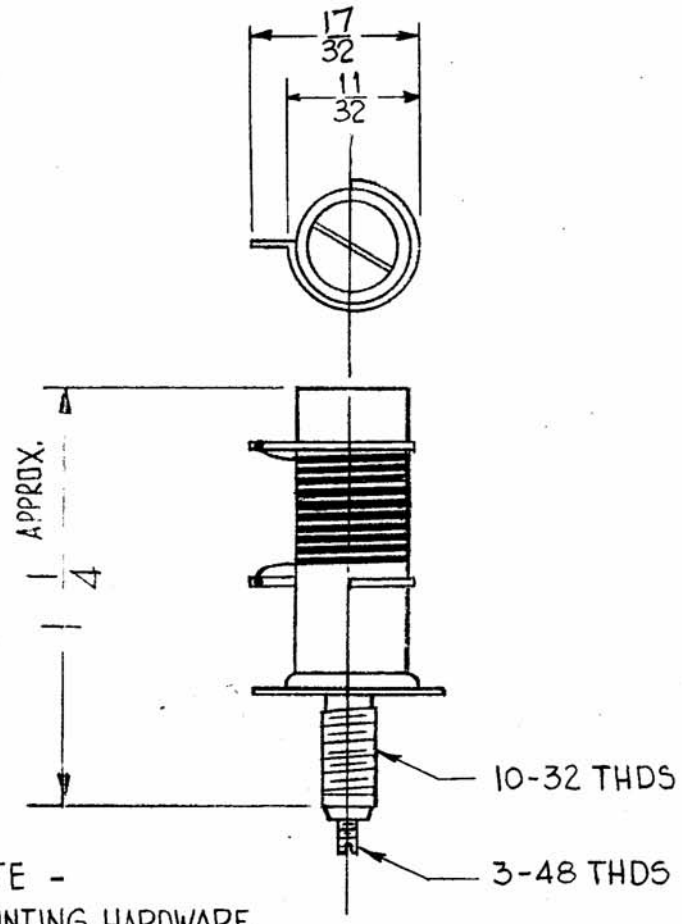

NOTE -
MOUNTING HARDWARE
SUPPLIED BY MFG

MODEL	REQ	FUNCTION	FREQ (MC)	SYMBOL
HFR-1	3	BAND#2-2,3,4RF	3 - 4	L1015,17,19
HFR-1	1	BAND#4-1RF	6 - 8	L1028
HFR-1	1	BAND#5-1RF	8 - 12	L1033

ELECTRICAL SPECIFICATIONS

TEST FREQ - 25 MC
MAX. IND - 1.3 μh (REF.)
MIN. IND - 0.6 μh (REF.)
Q - 70 MIN @ MIN L

MECHANICAL SPECIFICATIONS

COIL FORM CERAMIC (STUD MTG)
11 TURNS
AWG #24 MAGNET WIRE

SCHEMATIC

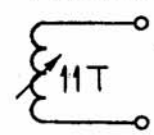

SYM	DESCRIPTION	DATE	CH. NO.	DRAFTS	CHECKER	ENG. APP.
A	ELEC. SPECS REVISED	10-3-66	16958	[illegible]	[illegible]	[illegible]
Ø	ORIGINAL RELEASE FOR PRODUCTION	8-13-64	Ø	A.M.		

UNLESS OTHERWISE SPECIFIED:
DIMENSIONS ARE IN INCHES
TOLERANCES ON
FRAC. ± 1/64 DEC. ± .005 ANGLES ± 1/2°

SCALE: 1A2493

MAXIMUM ALLOWABLE TOLERANCES HAVE BEEN DETERMINED AND ANY DEVIATIONS WILL BE CAUSE FOR REJECTION. REMOVE ALL BURRS AND SHARP EDGES

REQ.	ITEM	PART NO.	ANGER DESCRIPTION	SYMBOL
			THE TECHNICAL MATERIEL CORP. MAMARONECK, NEW YORK	
		STOCK SIZE	COIL, RF, TUNED	
		MATERIAL		
		TYPE & TEMPER / HEAT TREAT. SPEC.	RUZZO / @ / DRAWN / CHECKED	FINAL APPROVAL
		FINISH & SPEC. NO	J. ANGER / ELEC.	AC 165 A